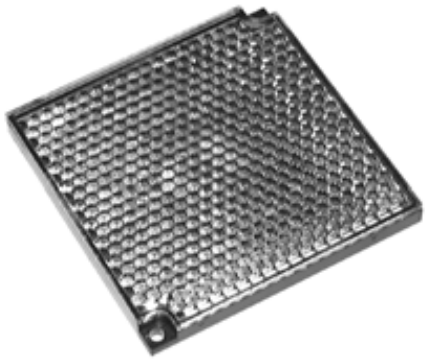

Model Number

REF-H85-2

Reflector, rectangular 84.5 mm x 84.5 mm, mounting holes

Features

- Mounting holes for simple installation
- High detection ranges achievable

Dimensions

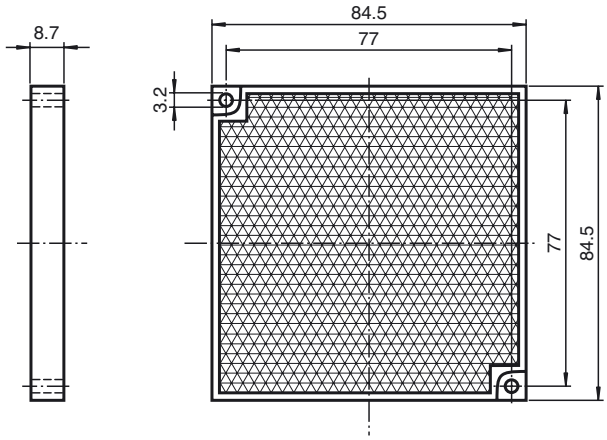

Technical data

General specifications	
Construction type	rectangular
Ambient conditions	
Ambient temperature	-20 ... 60 °C (-4 ... 140 °F)
Mechanical specifications	
Material	PMMA/ABS
Dimensions	84.5 mm x 84.5 mm x 8.7 mm
Mounting	mounting holes

Release date: 2015-11-09 16:19 Date of issue: 2015-11-09 185398_eng.xml