PRODUCT DETAILS

ARTICLE: 36014

WHEEL AS 125X40/40 BB SWIVEL FORK M4OL



Wheel series AS

Wheels with cast soft polyurethane coating 87 Sh.A on polyamide 6 center.
Wheel fitted with ball bearings.

Castor series M40

M40 series, medium-heavy duty pressed steel forks, swivel with double ball races & 'water resistant' protections. Zincplated.

Technical data

Wheel diameter	D	125 mm
Tyre width	E	40,0 mm
Bearing seat diameter	s	35 mm
Bore diameter	d	15 mm
Outer faces bearings distance	V	38 mm
Weight article		1,520 kg
Hub width	L	40 mm
Overall height	H	162 mm
Top plate outer dimensions	AxB	105x85 mm
Bolt hole spacing	axb	76x55 mm
Bolt hole spacing	axb	80x60 mm
Fixing bolt diameter	g	M8
Offset	F	41 mm
Fork width	U	50 mm
Load Capacity		300 kg

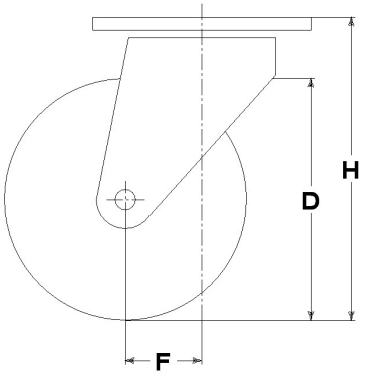

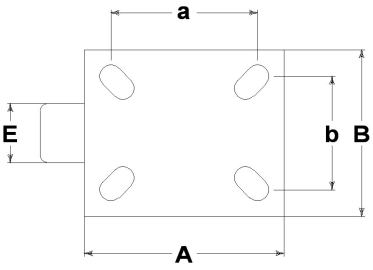

Related Articles

Spare part wheel: 35016CC
Version with footguard: 36014PP
Version with trailing brake: 36014FR
Version with trailing brake and footguard: 36014FRPP

GENERAL INFORMATION / RECOMMENDATIONS AND WARNINGS
The cited text and the complete catalogue in their most up-dated versions are available in the OEM's website page www.lagspa.it/downloads. The dimensions, descriptions, specifications and illustrations herein are indicative and subject to variations without notice. The fact that products are illustrated herein does not necessarily imply they are available from stock nor does it place us under any obligation to supply them.
Tests carried out refer to the original products with original accessories: the replacement of one of the components with others of different manufacture might prevent the same results from being achieved and will automatically invalidate any guarantee. Please contact our technical service concerning any special application.