# E40474

## Welding adapters EN10357 series A

ADAPT EN10357 DN65

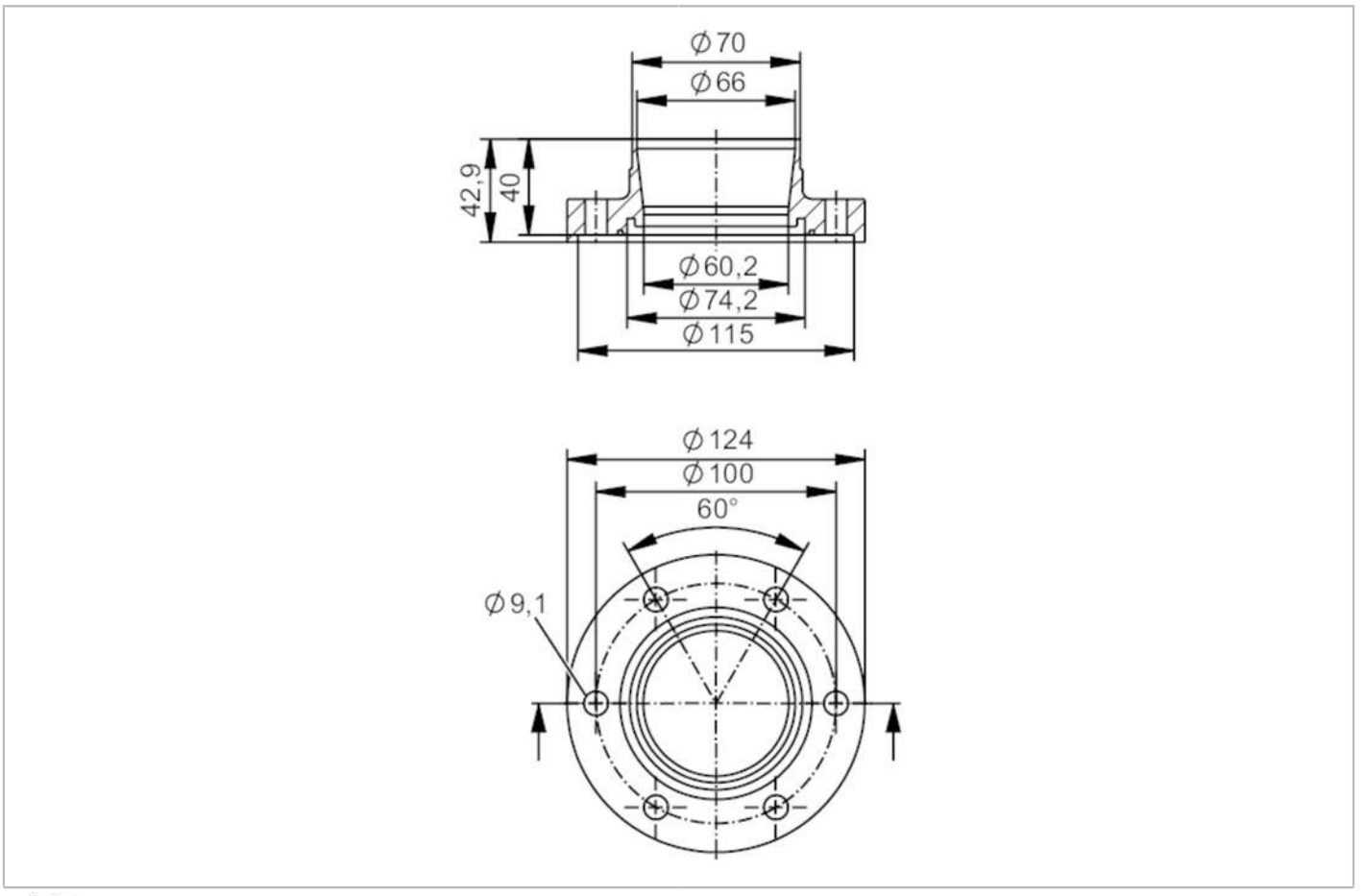


EC 1935/2004 FCM FDA

| | | | |
|---|---|---|---|
| **Application** | | | |
| Design | | for volumetric flow meters SMF | |
| Application | | food and beverage industry; hygienic systems | |
| Pressure rating | | 25 bar | 2.5 MPa |
| **Tests / approvals** | | | |
| Pressure Equipment Directive | | A possible classification to PED depends on the application and has to be carried out by the user / operator. | |
| Safety instructions | | The compatibility between medium and product material has to be checked in all applications. | |
| **Mechanical data** | | | |
| Weight | [g] | 3550 | |
| Materials | | stainless steel (316L/1.4404) | |
| Nominal diameter | | DN65 (2 1/2“) | |
| Sensor connection | | ifm-specific device flange | |
| Process connection | | welding adapter EN10357 series A (DIN) | |
| Process connection suitable for pipe standard | | (DIN EN 10357 series A); (DIN 11866 series A); (DIN 11850 series 2) | |
| Surface characteristics Ra/Rz of the wetted parts | | Ra ≤ 0.4 µm | |

# E40474

## Welding adapters EN10357 series A

**ADAPT EN10357 DN65**

| Accessories | |
|---|---|
| Items supplied | screws 12 |
| **Remarks** | |
| Pack quantity | 2 pcs. |