# MTL4582B - MTL5582B RESISTANCE ISOLATOR

to repeat RTD signals

The MTLx582B connects to a 2-, 3-, or 4-wire resistance temperature device (RTD) or other resistance located in a hazardous area, isolates it and repeats the resistance to a monitoring system in the safe area. The module is intended typically (but not exclusively) for use with Pt100 3-wire RTDs. Switches enable selection of 2-, 3-, or 4-wire RTD connection. The MTLx582B should be considered as an alternative, non-configurable MTLx575, for use in RTD applications where a resistance input is preferred or needed instead of 4/20mA. The design is notable for its ease of use and repeatability. The number of wires which can be connected on the safe-area side of the unit is independent of the number of wires which can be connected on the hazardous-area side. The module drives upscale in the case of open circuit detection.

## SPECIFICATION

***See also common specification***

**Number of channels**
One
**Location of RTD**
Zone 0, IIC, T4 hazardous area
Div. 1, Group A, hazardous location
**Resistance source**
2-, 3-, or 4-wire* RTDs to BS 1904/DIN 43760 (100Ω at 0°C)
*user selectable by switches (factory set for 3-wire)
**Resistance range**
10Ω to 400Ω
**RTD excitation current**
200µA nominal
**Output configuration**
2, 3 or 4 wires (independent of mode selected for hazardous area terminals)
**Output range**
10Ω to 400Ω (from a 100µA to 5mA source)
**Temperature drift**
±10mΩ/°C typical (0.01%/°C @ 100Ω)
**Response time**
To within 4% of final value within 1s
**Safety drive on open-circuit sensor**
Upscale to 420Ω nominal
**Transfer accuracy@20°C**
<0.15Ω at excitation current 1 - 5mA
<0.25Ω at excitation current 0.5 - 1mA

**MTL4582B**

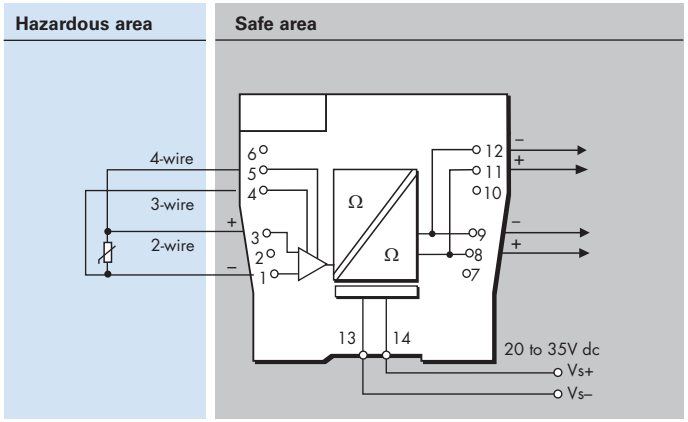


**MTL5582B**

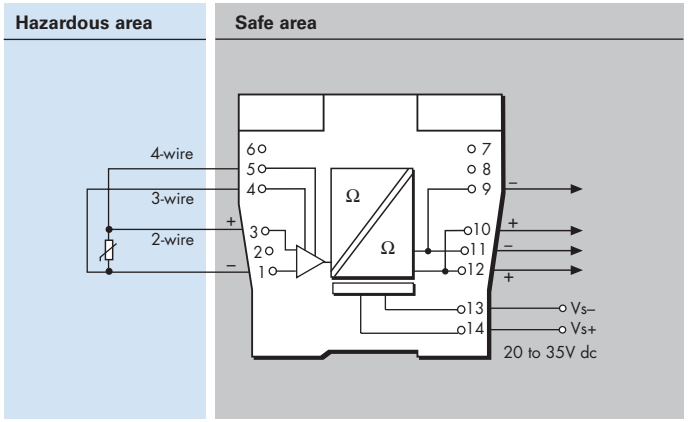


**LED indicator**
Green: power indication
**Power requirements, Vs**
33mA at 24V
35mA at 20V
28mA at 35V
**Maximum power dissipation within unit**
0.8W at 24V
1.0W at 35V
**Safety description**
Terminals 1 and 3
$U_o$ = 1.2V $I_o$ = 4mA $P_o$ = 1.2mW $U_m$ = 253V rms or dc
Non-energy-storing apparatus ≤ 1.5V, ≤ 0.1A, ≤ 25mW; can be connected without further certification into any IS loop with an open circuit voltage < 5V.
Terminals 1, 3, 4 and 5
$U_o$ = 6.51V $I_o$ = 10mA $P_o$ = 17mW

Powering Business Worldwide


**Eaton Electric Limited,**
Great Marlings, Butterfield, Luton
Beds, LU2 8DL, UK.
Tel: + 44 (0)1582 723633 Fax: + 44 (0)1582 422283
E-mail: mtlenquiry@eaton.com
www.mtl-inst.com



The given data is only intended as a product description and should not be regarded as a legal warranty of properties or guarantee.
In the interest of further technical developments, we reserve the right to make design changes.

© 2016 Eaton
All Rights Reserved


Publication No.
EPSx582B Rev3 010916



**EUROPE (EMEA):**
+44 (0)1582 723633 mtlenquiry@eaton.com
**THE AMERICAS:**
+1 800 835 7075 mtl-us-info@eaton.com
**ASIA-PACIFIC:**
+65 6 645 9888 sales.mtlsing@eaton.com