Q22 series

Ø22 mm panel mount LED indicators



DISTINCTIVE FEATURES

16.75 mm colored diffused epoxy lens or 16.75 mm super bright LEDs

Secret until lit polycarbonate decals or custom engraving

(2.8 x 0.8) solder lug/faston terminals, pins or (200 mm long) wire terminations

Available in RGB



ENVIRONMENTAL SPECIFICATIONS

- IP67 sealing option (EN60529)
- Operating & Storage Temperature Range:
  Rear plastic body: -30 °C to +65 °C (–22 °F to +149 °F)
  Rear epoxy body: -40 °C to +85 °C (–40 °F to +185 °F)

GENERAL SPECIFICATIONS

- Max Reverse Voltage: 5 V
- Viewing Angle: 30–100° (dependant on model)
- Life Expectancy: 100,000 hours
- Torque: 75 cNm
- Maximum panel thickness:
  12 mm (Prominent & Recessed),
  10 mm (Flush & Chamfered)
- Insulation resistance : 4,000 MΩ at 500 VDC

MOUNTING

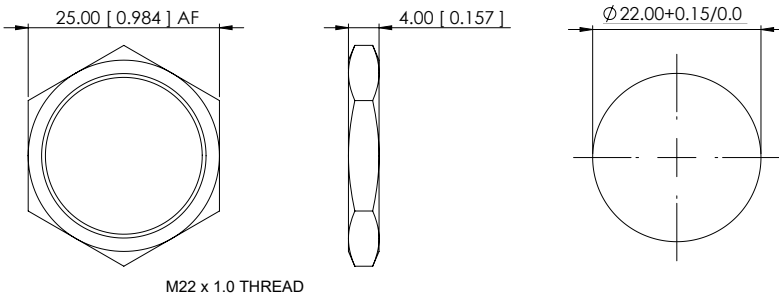

The company reserves the right to change specifications without notice.

All LED characteristics are dependent upon environmental conditions. Therefore published data should be considered nominal and subject to variations.

.

Q22 series

Ø22 mm panel mount LED indicators

MATERIALS

- Plated brass bezel finished in bright chrome, black or satin grey and moulded polycarbonate rear body.

CONNECTIONS

REAR EPOXY WIRES FOR RGB OPTION

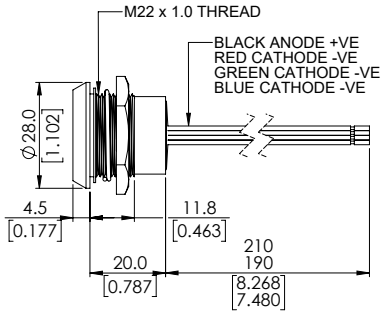

Voltage	Operating Voltage (Min to Max)	Operating Current (Typical All Types)
05 (No Resistor)	3.3 to 9.9 VDC	40 mA max*
12 VDC	10.8 to 13.2 VDC	40 mA
24 VDC	21.6 to 26.4 VDC	40 mA
28 VDC	25.2 to 30.8 VDC	40 mA
110 VAC	99 to 121 VAC	5 mA
220 VAC	207 to 235 VAC	3 mA

* Customer to supply resistor for desired operating current.

ELECTRICAL SPECIFICATIONS

STANDARD LED INTENSITY

LED COMPONENT SPECIFICATIONS			
	Prominent and Recessed	Flush	Forward Voltage
HE Red	82 mcd	70 mcd	5.7 V
Green	95 mcd	66 mcd	6.0 V
Yellow	60 mcd	59 mcd	5.9 V
Blue	120 mcd	101 mcd	9.9 V
White	1,000 mcd	150 mcd	3.3 V
Bi-color (Typical) (Red/Green)	80/50 mcd	80/50 mcd	2.0 V/2.2 V
Tri-color (Typical) (Red/Green/Yellow)	80/50/50 mcd	80/50/50 mcd	2.0 V/2.2 V/2.1 V

Bi-color - The color is changed by reversing the polarity of the supply voltage.
Tri-color - The indicator has red and green LEDs, when both connected yellow is produced.

SUPER BRIGHT LED INTENSITY

LED COMPONENT SPECIFICATIONS			
	Prominent and Recessed	Flush	Forward Voltage
HE Red	465 mcd	800 mcd	5.7 V
Green	245 mcd	980 mcd	9.0 V
Yellow	365 mcd	1,250 mcd	6.0 V

RGB LED INTENSITY

ITEM	SYMBOL	CONDITION	TYP.
DC Forward Voltage	V_F(R)	IF=20 mA	2.1
	V_F(B/G)	IF=20 mA	3.1
Luminous Intensity	Iv (Red)		220 mcd
	Iv (Green)		500 mcd
	Iv (Blue)		100 mcd

ADDITIONNAL INFORMATION ON LED COMPONENTS

- Bi-color leds, by connecting the gold faston (+) one color is produced, by reversing the supply voltage another color is produced – bi-colors are available up to 28 VDC
- The tri-color led has red and green leds when both are connected yellow is produced
- The operating voltage must not be exceeded by more that 10% as this will result in reduced life expectancy
- Luminous intensity is measured at 20 mA on a discrete led unless otherwise stated.
- Luminous intensities and color shades of white LEDs may vary within a batch.
- Luminous intensity will be reduced with lower operating current.
- Recommended usage:
  - Standard: Homogenous light output that is good for indoor applications.
  - Hyper Bright: Homogenous light output that is good for outside viewing and is daylight visible.
  - Super Bright: A water clear LED that is good for long distance viewing and is daylight visible.

Q22 series

Ø22 mm panel mount LED indicators

BUILD YOUR PART NUMBER

Q — SERIES

MOUNTING HOLE

22	Ø22mm

BEZEL STYLE

	Metal
P	Prominent
R	Recessed
F	Flush
Y	Chamfer*

TERMINALS

1	Solder Lug/ Fastons (2.8 x 0.8)
4	Rear epoxy Pins
5	Rear epoxy Wires
6	Short body Pins
7	Short body Wires

BEZEL FINISH

	Metal
C	Bright Chrome
B	Black
G	Satin Grey
S	Stainless Steel

	Anodized Flush
AR	Red
AG	Green
AY	Yellow
AB	Blue
AN	Black

* bezel finish : only with option "S" and "Anodized Flush"

TYPE OF ILLUMINATION

XX	Fixed Light
KK	Flashing Light (only 12 VDC)
YY	Bi-color
ZZ	Tri-color

LED COLOR

R	Red
G	Green
Y	Yellow
B	Blue
W	White
SR	Super Bright Red
SG	Super Bright Green

SY	Super Bright Yellow
RG	Red/Green
RY	Red/Yellow
GY	Green/Yellow
RYG	Red/Yellow/ Green
RGB	Red/Green/ Blue*

* Terminals option 5 and common anode only

VOLTAGE

05	no resistor**
12	12 VDC
12A	12 VAC/DC
24	24 VDC
24A	24 VAC/DC
28	28 VDC
28A	28 VAC/DC
110	110 VAC
220	220 VAC

** please refer to the forward voltage in electrical specifications

SEALING

(Blank)	Unsealed
E	IP67

OPTIONS***

DL	Daisy Chain
LT	Lamp Test

*** Available in single color only.

(Blank)	Common cathode
-CA	Common anode

ABOUT THIS SERIES

Notice: please note that not all combinations of above numbers are available.

- Gold faston terminal denotes anode (+), silver terminal denotes cathode (-)
- Standard wire length is 200 mm, 22 AWG UL1007, red wire denotes anode (+), black wire denotes cathode (-) for other wire lengths consult APEM
- For leds with alternative voltages please consult Apem
- 110 VAC and 220 VAC, only available with terminal options 1 and 5
- Take care when soldering to the faston terminals (recommended solder temperature 300 °C - 3 sec)
- Pin and Wire options are epoxy sealed at the rear of the bezels, termination options 4 and 5
- Standard tri-color faston terminals are two anodes (+) and one cathode (-)
- Tri-color wires are one red (+) and one green (+) anode and one black (-) cathode
- Tri-color pins are center (–) cathode, shortest (+) anode pin green, longest (+) anode pin red
- Daisy chaining option - has negative (Cathode) terminals linked (3 x Fastons), solder lugs only
- Lamp test facility option 4 x solder lug/Faston only
- We recommend using superbright leds for use at 110 VAC and 220 VAC

Q22 series

Ø22 mm panel mount LED indicators

PROMINENT BEZEL



SOLDER LUG/FASTON

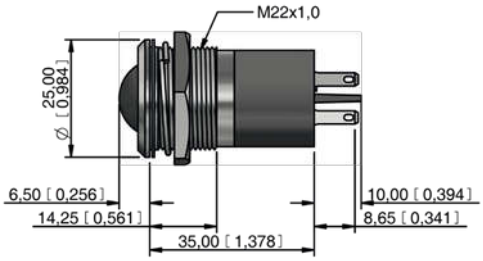

REAR EPOXY WIRES

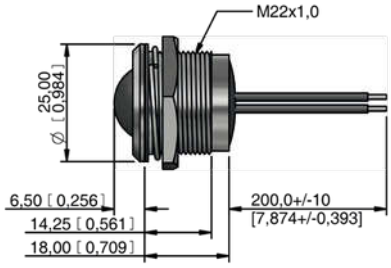

REAR EPOXY PINS

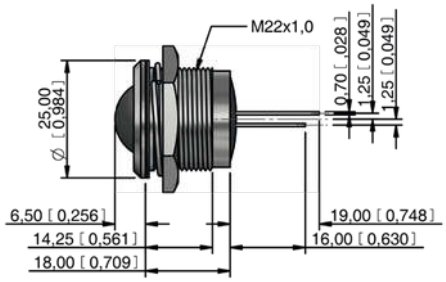

SHORT BODY WIRES

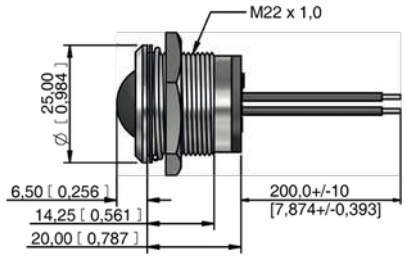

SHORT BODY PINS

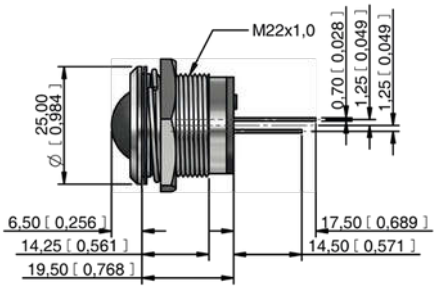

Q22 series

Ø22 mm panel mount LED indicators

FLUSH BEZEL



SOLDER LUG/FASTON

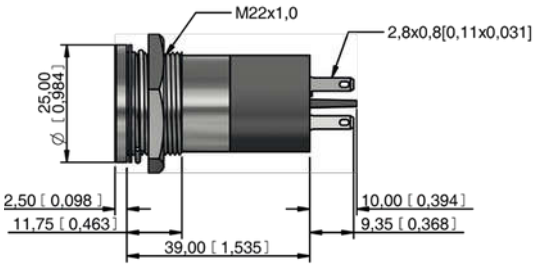

REAR EPOXY WIRES

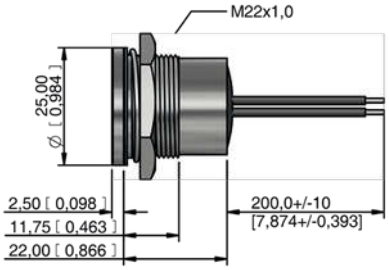

REAR EPOXY PINS

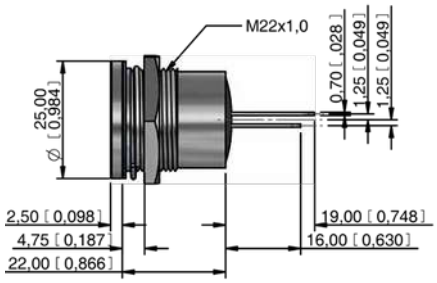

SHORT BODY WIRES

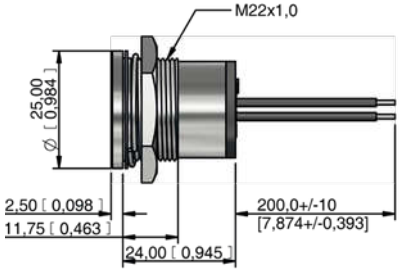

SHORT BODY PINS

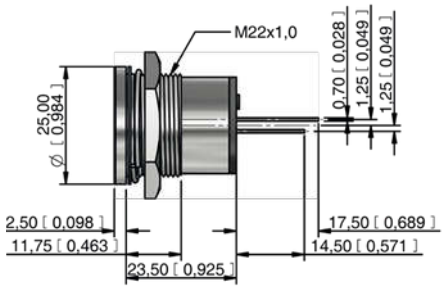

Q22 series

Ø22 mm panel mount LED indicators

RECESSED BEZEL



SOLDER LUG/FASTON

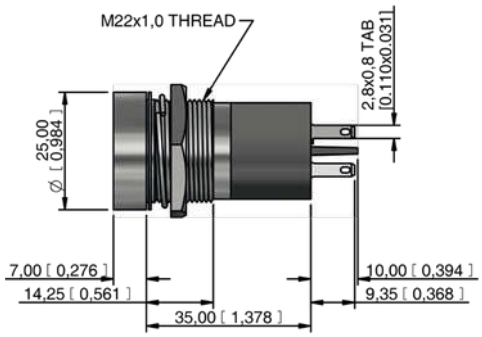

REAR EPOXY WIRES

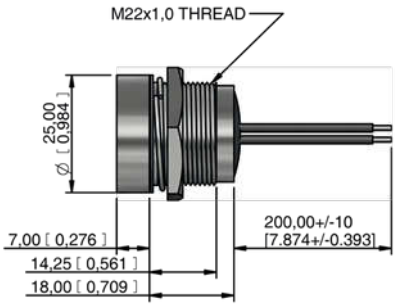

PINS

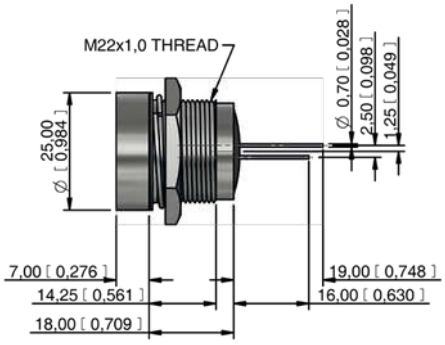

SHORT BODY WIRES

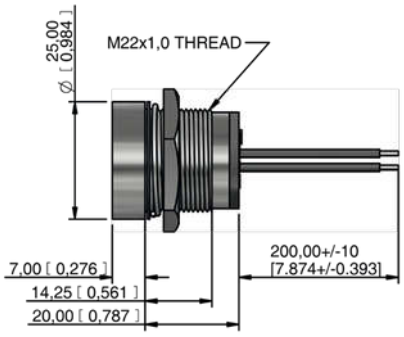

REAR EPOXY PINS

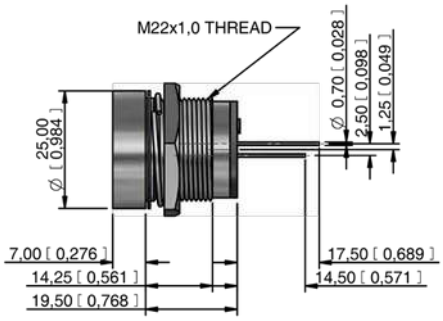

Q22 series

Ø22 mm panel mount LED indicators

CHAMFER BEZEL
(316L STAINLESS STEEL AND ANODIZED ALUMINIUM ONLY)



REAR EPOXY WIRES

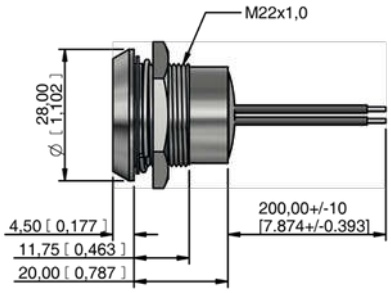

SHORT BODY WIRES

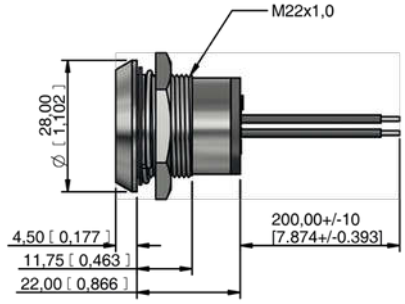

SOLDER LUG/FASTON

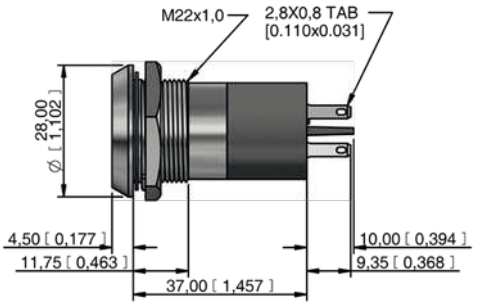

PINS

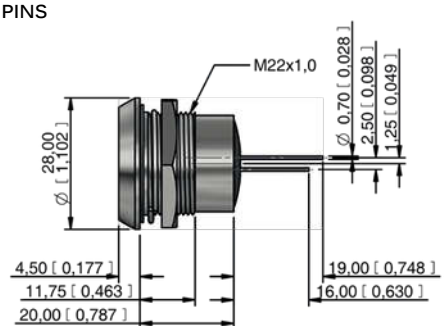

REAR EPOXY PINS

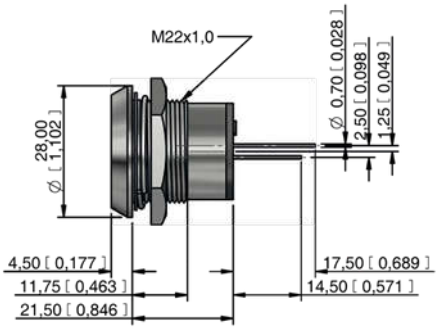

Q22 series

Ø22 mm panel mount LED indicators

CUSTOM ENGRAVING

Some common codes are listed above, for your custom requirements please contact APEM.
Unless specified standard engraving with white infill will be supplied.
Suffix the part number with legend code :

High beam **-0AJ**	Low beam **-097**	Rear fog **-027**	Front fog **-026**	Windscreen wiper **-021**	Windscreen washer **-022**	Ventilator fan **-023**
Turn Signal **-0AH**	Side lights **-098**	Horn **-041**	Hazard warning **-013**	Heating **-018**	Brake test **-0BU**	Arrow **-0K6**
Battery **-0AG**	Oil can **-0GP**	Windscreen heating **-020**	ABS **-086**	Engine coil **-0EL**	Seat belt **-0SB**	USB connection **-0BU**
Steam **-0ST**	ECU **-0EU**	Side step **-0AD**	Air con **-012**	Engine **-040**	Boot/Trunk Release **-0BR**	



Q22 series

Ø22 mm panel mount LED indicators

SECRET UNTIL LIT POLYCARBONATE INSERTS

Some common codes are listed above, for your custom requirements please contact APEM. Please note Secret until lit inserts only available with flush metal bezel (Option F)
Suffix the part number with legend code :

Turn signal **-3AH**	Hazard **-313**	Oil can **-3GP**	Battery **-3AG**	Rear fog **-327**	Low beam **-397**	Brake test **-3BU**
Arrow **-3K6**	High beam **-3AJ**	Park brake **-3PB**	Side lights **-398**	Seat belt **-3SB**	Type pressure **-3TP**	Check engine **-3CE**
Engine temperature **-3EC**	Fuel **-3FP**	Brake failure **-3BF**				



Off



On

CABLE LENGTH AND CONNECTOR







For custom cable length and connectors contact APEM.