S+S REGELTECHNIK

Mounting flange, plastic
Capillary tube gland bracket

Dimensional drawing **MF-06-K**

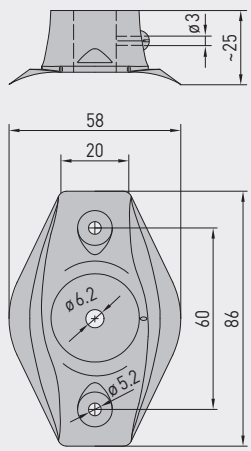

Dimensional drawing **MF-15-K**

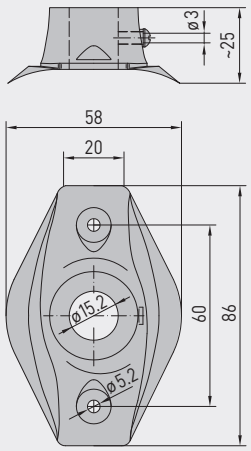

Dimensional drawing **MFT-20-K**

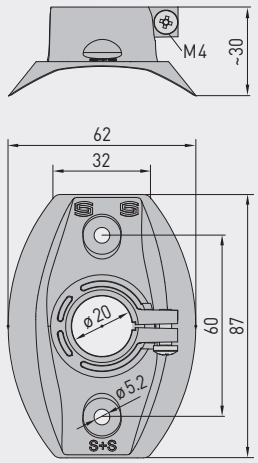

Dimensional drawing **KRD-04**

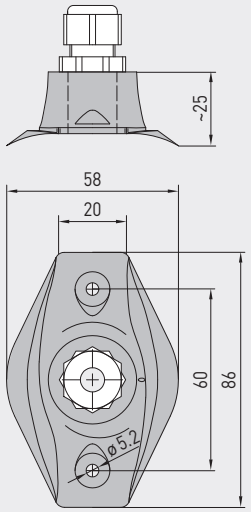

MF-06-K
Mounting flange, plastic

MF-15-K
Mounting flange, plastic

MFT-20-K
Mounting flange, plastic

KRD-04
Capillary tube gland bracket, plastic









Type / WG01	Mounting flange, plastic	Tube Gland	T_{max}	Item No.	Price
MF-xx-K	for **metal** protective tubes!				
MF-06-K	Mounting flange, plastic, approx. 58 x 86 x 25 mm for rod sensors **MWTF / MWTM**	Ø 6.2 mm	+100 °C	7100-0030-1000-000	**6,30 €**
MF-10-K	Mounting flange, plastic, approx. 58 x 86 x 25 mm for duct air flow monitors **KLGF / KLSW**	Ø 10.2 mm	+100 °C	7100-0031-1000-000	**9,85 €**
MF-14-K	Mounting flange, plastic, approx. 58 x 86 x 25 mm for duct humidity sensors **KFF / KFTF** and pendulum room humidity sensors **RPFF / RPFTF** as well as for duct air flow monitors **KLGF / KLSW**	Ø 14.2 mm	+100 °C	7100-0030-2000-000	**9,85 €**
MF-15-K	Mounting flange, plastic, approx. 58 x 86 x 25 mm for temperature sensors **TF** (series Tyr 1) and temperature measuring transducers **TM** (series Tyr 1)	Ø 15.2 mm	+100 °C	7100-0032-0000-000	**6,30 €**
MF-20-K	Mounting flange, plastic, approx. 58 x 86 x 25 mm for duct sensors **KH**	Ø 20.2 mm	+100 °C	7100-0030-4000-000	**9,85 €**
MFT-20-K	for **PLEUROFORM** multi-channel pipes!				
MFT-20-K	Mounting flange, plastic, approx. 62 x 87 x 30 mm for duct sensors (series Tyr 1 / Tyr 2)	Ø 20 mm	+100 °C	7000-0031-0000-000	**9,85 €**

Type / WG01	Capillary tube gland bracket	Item No.	Price
KRD-04	Capillary tube gland bracket, plastic, approx. 58 x 86 x 25 mm (M 16 x 1.5) for frost protection thermostats (e.g. for air ducts) and rod sensors **MWTF / MWTM**	7100-0030-7000-000	**9,18 €**

Dimensional drawing **MF-06-M**

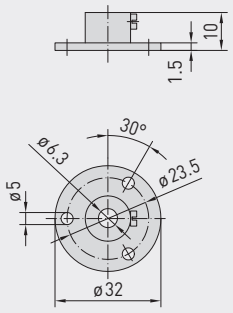

Dimensional drawing **MK-05-M**

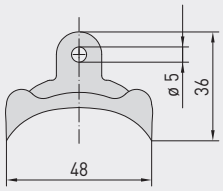

Dimensional drawing **MK-05-K**

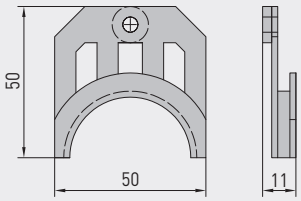

MF-06-M

Mounting flange, metal



MK-05-M

Galvanised steel mounting clamps



MK-05-K

Mounting clamps, plastic



Type / WG01	Mounting flange, metal	Tube Gland	T_{max}	Item No.	Price
MF-xx-M	for **metal** protective tubes!				
MF-06-M	Mounting flange, metal (galvanised steel), Ø 32 mm, for temperature sensors **TF** (form B) temperature measuring transducers **TM** (form B), rod sensors **MWTF / MWTM**	Ø 6.3 mm	+700 °C	7100-0030-5000-100	**12,95 €**

Type / WG01	Mounting clamps	Item No.	Price
MK-05-M	Galvanised steel **mounting clamps** (6 pieces) for rod sensors **MWTF / MWTM**	7100-0034-0000-000	**10,18 €**
MK-05-K	Plastic **mounting clamps** (6 pieces) for frost protection thermostats	7100-0034-1000-000	**10,18 €**

Mounting accessories for Immersion sensor

S+S REGELTECHNIK

Dimensional drawing **ESSH**

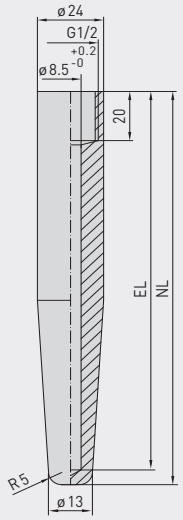

Dimensional drawing **KVSS**

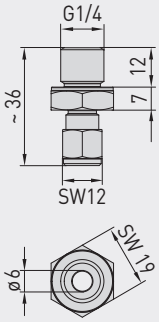

Dimensional drawing **KVST**

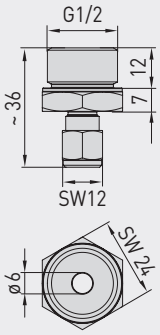

Dimensional drawing **TH-ADAPTER-HW**

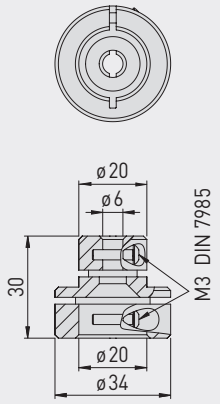

ESSH

Welding protective sleeve



KVSS

Clamp union with cutting ring



KVST

Clamp union with clamp ring



TH-ADAPTER-HW

Immersion sleeve adapter, metal





Type / WG01	Welding protective sleeve	Item No.	Price
	Welding protecting sleeves, G½" straight internal pipe thread, stainless steel **V4A** (1.4571), other materials on request,		
ESSH 100MM	for immersion sleeves (EL) = 100 mm, P_{max} = 100 bar	7100-0052-0020-001	**70,94 €**
ESSH 150MM	for immersion sleeves (EL) = 150 mm, P_{max} = 100 bar	7100-0052-0030-001	**81,44 €**
ESSH 200MM	for immersion sleeves (EL) = 200 mm, P_{max} = 100 bar	7100-0052-0040-001	**91,92 €**

Type / WG01	Clamp union	Item No.	Price
KVST	**Clamp union** with clamp ring PTFE, Ø 6 mm	7100-0032-0110-000	**100,92 €**
KVSS	**Clamp union** with cutting ring VA, Ø 6 mm	7100-0032-1000-000	**65,03 €**

Type / WG01	Immersion sleeve adapter, metal	Item No.	Price
TH-ADAPTER-HW	Metal immersion sleeve adapter (adaptation Ø 20 mm / Ø 6 mm) for mounting S+S temperature sensors from the TF and TM series in immersion sleeves by Honeywell / CentraLine of the types VFFT, VFL, VFNT, VFLN	7100-0037-0001-000	**15,95 €**

Dimensional drawing **ASD-06**

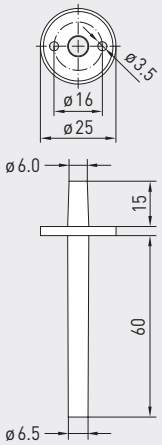

Dimensional drawing **ASD-07**

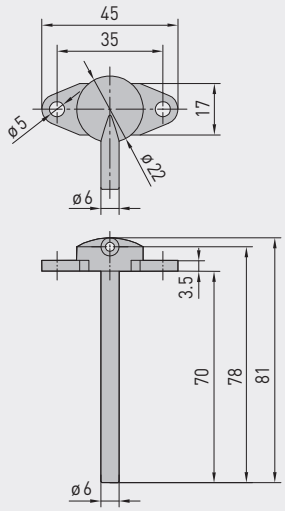

Dimensional drawing **DAL**

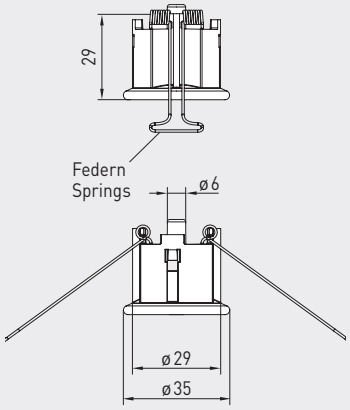

ASD-06

Connection set
(straight nipples)



ASD-07

Connection nipples
(at 90 degree angle)



DAL

Pressure outlet

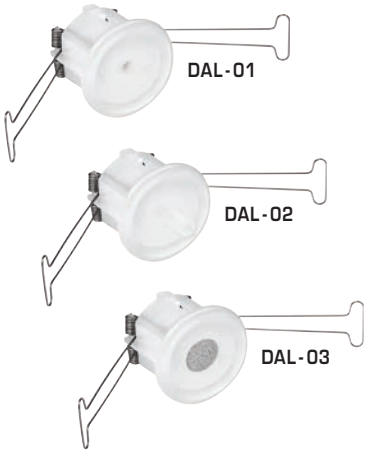

Type / WG01	Accessories for differential pressure switches	Item No.	Price
ASD-06	**Connection set** consisting of 2 connection nipples (straight) made of ABS, 2 m PVC hose (soft, UV-resistant), 4 Philips head screws (no pre-drilling required)	7100-0060-3000-000	**7,87 €**
ASD-07	**2 connection nipples** (at 90 degree angle) made of ABS	7100-0060-7000-000	**7,87 €**
ASS-UV 100M	**Connecting hose**, UV-resistant, Ø 6 mm, 1 roll (100 m)	7100-0060-3101-000	**1.666,89 €**
DAL-01	**Pressure outlet** for ceiling and in-wall installation as a pressure reference point, Ø 6 mm	7300-0060-3000-001	**36,84 €**
DAL-02	for hose attachment, Ø 6 mm	7300-0060-3000-100	**36,84 €**
DAL-03	as a pressure reference point, with sinter filter made of stainless steel **V4A** (1.4404), Ø 6 mm	7300-0060-3000-200	**69,00 €**

Type / WG01	Accessories for differential pressure switches DS1, DS2	Item No.	Price
DS-MW-Z	Sheet steel **mounting angle** in **Z-Form**	7100-0063-0000-000	**13,76 €**
DS-MW-L	Sheet steel **mounting angle** in **L-Form**	7100-0063-1000-000	**14,08 €**
DS-MW-U	Sheet steel **mounting angle** in **U-Form**	7100-0060-9000-000	**17,31 €**

S+S REGELTECHNIK

Protection hoods

Dimensional drawing **WS-01**

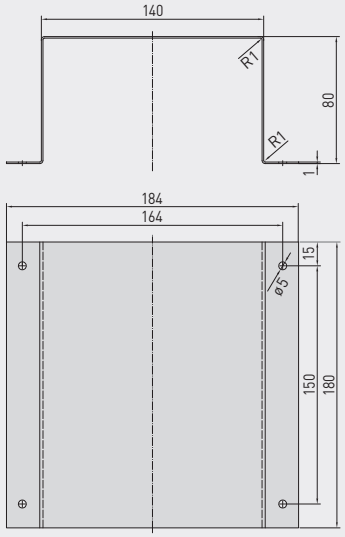

WS-01

Sun and
ball-impact protection hood

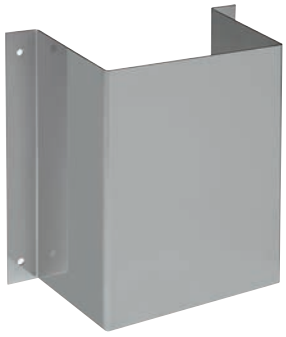

Dimensional drawing **WS-03**

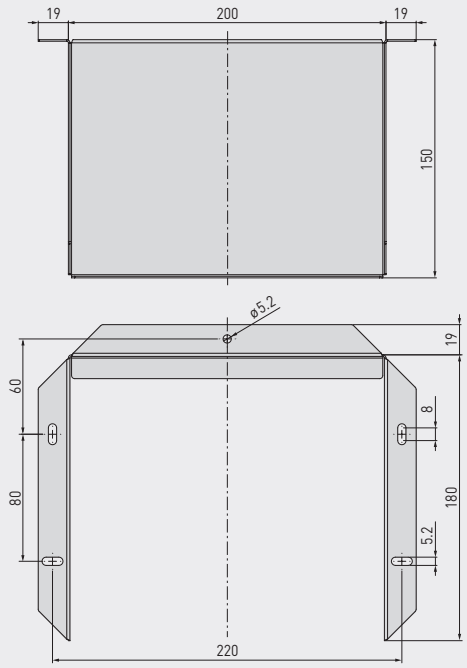

WS-03

Weather and
sun protection hood

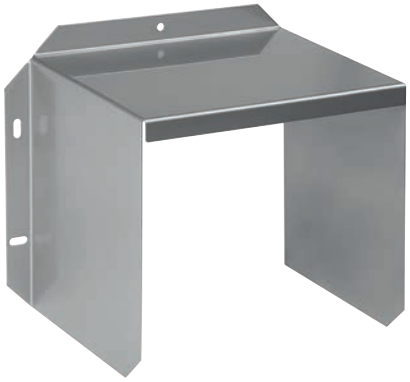

Dimensional drawing **WS-04**

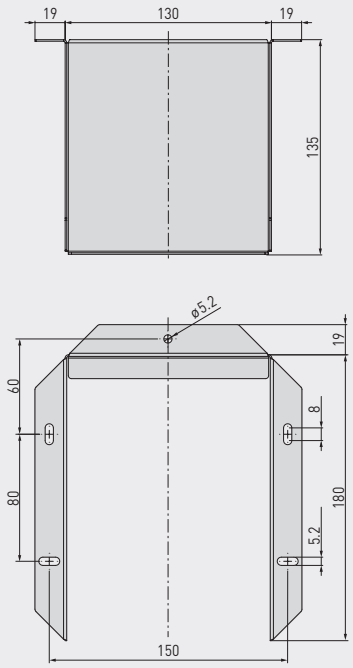

WS-04

Weather and
sun protection hood



Type / WG01	Protection hoods	Item No.	Price
WS-01	**Sun and ball-impact protection hood,** 184 x 180 x 80 mm, stainless steel **V2A** (1.4301)	7100-0040-2000-000	**32,72 €**
WS-03	**Weather and sun protection hood,** 200 x 180 x 150 mm, stainless steel **V2A** (1.4301)	7100-0040-6000-000	**46,08 €**
WS-04	**Weather and sun protection hood,** 130 x 180 x 135 mm, stainless steel **V2A** (1.4301)	7100-0040-7000-000	**38,61 €**

HS-Adapter



Dimensional drawing **SF-K**

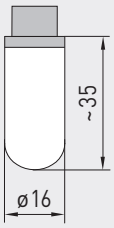

Dimensional drawing **SF-M**



Dimensional drawing **MODBUS-Y**

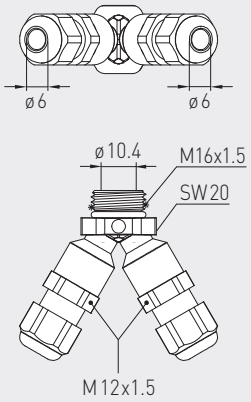

HS-Adapter

Universal holder
for small housing
on top-hat rails



SF-K

Plastic sinter filter



SF-M

Metal sinter filter



MODBUS-Y

Y-Adapter als Bypass
für Busanschluss



Type / WG01	Spare parts, small parts and special accessories	Item No.	Price
SF-K	**Plastic sinter filter**, Ø 16 mm, L = 35 mm, exchangeable for humidity sensors	7000-0050-2310-000	**13,25 €**
SF-M	**Metal sinter filter**, Ø 16 mm, L = 32 mm, exchangeable, stainless steel **V4A** (1.4404) for humidity sensors	7000-0050-2200-100	**43,60 €**
PSW-09	1 set of **stainless steel paddles** 1-8" (4 pieces), 29 x 34/60/89/157 mm for flow monitors SW	7700-0010-1000-000	**19,80 €**
PWFS-08	**Stainless steel vane** for vane switch WFS	7700-0010-2000-000	**19,17 €**
WH-20	**Wall bracket** for duct hygrostats KH	1200-0010-4000-000	**12,84 €**
HS-ADAPTER	**Universal holder for small housings** made from plastic PA6, black, for installation on 35mm top-hat rails, incl. fixing screws	7100-0038-0000-000	**22,96 €**
SPB1	**Strap** for surface-contact sensors	7100-0035-0000-000	**3,89 €**
WLP-1	**Heat-conductive paste**, silicone-free (2 ml)	7100-0060-1000-000	**4,79 €**
MODBUS-Y	**Y-adapter** for cable gland M16x 1.5 (on 2x M12x 1.5), made of plastic	7000-0005-0002-100	**10,84 €**

Special accessories for M12 connector
5-pin / 12-pin, A coded,
Circular connector with screw-locking according to DIN EN 61076-2-101

S+S REGELTECHNIK

AL xx
Connecting cable
with cable socket

VL xx
Interconnecting cable
with cable socket
and cable connector

KB xx
Cable socket
without cable





5-pin



12-pin



Connecting cable for M12 connector	Type / WG01I	Cable length	Item No.	Price
PVC cable, **5-pin, shielded**, with cable socket (M12, A coded, female), approx. Ø = 15 mm, L = 35 mm, and one open cable end	**ALG xx A5F**		**5-pin, shielded**	
	ALG M12-A5F PVC 2M	**2 m**	2000-9121-0000-031	**28,26 €**
	ALG M12-A5F PVC 5M	**5 m**	2000-9121-0000-041	**36,24 €**
	ALG M12-A5F PVC 10M	**10 m**	2000-9121-0000-051	**49,89 €**
PVC cable, **5-pin,** unshielded, with cable socket (M12, A coded, female), approx. Ø = 15 mm, L = 35 mm, and one open cable end	**AL xx A5F**		**5-pin,** unshielded	
	AL M12-A5F PVC 2M	**2 m**	2000-9121-0000-001	**19,37 €**
	AL M12-A5F PVC 5M	**5 m**	2000-9121-0000-011	**23,99 €**
	AL M12-A5F PVC 10M	**10 m**	2000-9121-0000-021	**31,30 €**
PVC cable, **12-pin,** unshielded, with cable socket (M12, A coded, female), approx. Ø = 15 mm, L = 35 mm, and one open cable end	**AL xx A12F**		**12-pin,** unshielded	
	AL M12-A12F PVC 2M	**2 m**	2000-9122-0000-001	**62,14 €**
	AL M12-A12F PVC 5M	**5 m**	2000-9122-0000-011	**73,52 €**
	AL M12-A12F PVC 10M	**10 m**	2000-9122-0000-021	**92,85 €**

Interconnecting cable for M12 connector	Type / WG01I	Cable length	Item No.	Price
PVC cable, **5-pin, shielded**, with cable socket (M12, A coded, female) and cable connector (M12, A coded, male) approx. Ø = 15 mm, L = 35 mm	**VLG xx A5**		**5-pin, shielded**	
	VLG M12-A5 PVC 2M	**2 m**	2000-9111-0000-031	**60,79 €**
	VLG M12-A5 PVC 5M	**5 m**	2000-9111-0000-041	**68,87 €**
	VLG M12-A5 PVC 10M	**10 m**	2000-9111-0000-051	**82,70 €**
PVC cable, **5-pin,** unshielded, with cable socket (M12, A coded, female) and cable connector (M12, A coded, male) approx. Ø = 15 mm, L = 35 mm	**VL xx A5**		**5-pin,** unshielded	
	VL M12-A5 PVC 2M	**2 m**	2000-9111-0000-001	**34,58 €**
	VL M12-A5 PVC 5M	**5 m**	2000-9111-0000-011	**39,10 €**
	VL M12-A5 PVC 10M	**10 m**	2000-9111-0000-021	**48,83 €**
PVC cable, **12-pin,** unshielded, with cable socket (M12, A coded, female) and cable connector (M12, A coded, male) approx. Ø = 15 mm, L = 35 mm	**VL xx A12**		**12-pin,** unshielded	
	VL M12-A12 PVC 2M	**2 m**	2000-9112-0000-001	**129,68 €**
	VL M12-A12 PVC 5M	**5 m**	2000-9112-0000-011	**142,51 €**
	VL M12-A12 PVC 10M	**10 m**	2000-9112-0000-021	**163,96 €**

Mounting accessories for M12 connector	Type / WG02	Contact	Item No.	Price
Cable socket (M12, A coded, female), approx. Ø = 20 mm, L = 54 mm, unassembled, without cable	**KB xx**		**female**	
	KB M12-A5	**5-pin**	7100-0070-0712-000	**23,81 €**
	KB M12-A12	**12-pin**	7100-0070-0714-000	**71,06 €**
Cable connector (M12, A coded, male), approx. Ø = 20 mm, L = 54 mm, unassembled, without cable	**KS xx**		**male**	
	KS M12-A5	**5-pin**	7100-0070-0716-000	**23,81 €**
	KS M12-A12	**12-pin**	7100-0070-0718-000	**71,06 €**

Special accessories for M8 connector
4-pin, EtherCATP coded,
for industrial EtherCATP applications

ALG ECATP xx

Connecting cable
with one cable connector



VLG ECATP xx

Interconnecting cable
with two cable connectors



EtherCAT P



Connecting cable for EtherCATP	Type / WG02	Cable length	Item No.	Price
PUR cable, 4-pin, **shielded**, **with one cable connector** (M8, EtherCATP coded) and one open cable end	**ALG ECATP xx**		shielded	
	ALG ECATP 0.5m	**0.5 m**	2000-9131-0000-001	**40,74 €**
	ALG ECATP 1m	**1.0 m**	2000-9131-0000-011	**44,43 €**
	ALG ECATP 2m	**2.0 m**	2000-9131-0000-021	**48,02 €**
	ALG ECATP 5m	**5.0 m**	2000-9131-0000-031	**72,90 €**

Interconnecting cable for EtherCATP	Type / WG02	Cable length	Item No.	Price
PUR cable, 4-pin, **shielded**, **with two cable connectors** (M8, EtherCATP coded)	**VLG ECATP xx**		shielded	
	VLG ECATP 0.5m	**0.5 m**	2000-9131-0000-041	**65,91 €**
	VLG ECATP 1m	**1.0 m**	2000-9131-0000-051	**71,36 €**
	VLG ECATP 2m	**2.0 m**	2000-9131-0000-061	**82,42 €**
	VLG ECATP 5m	**5.0 m**	2000-9131-0000-071	**115,65 €**

S+S REGELTECHNIK

Optional services

Individual components / WG01		Item No.	Price
FET		7100-0022-4000-000	**52,46 €**
KTY 81-210		7100-0022-0000-000	**4,97 €**
LM235Z	(TCR = 10 mV / K; 2.73 V at 0°C), KP10	7100-0022-1000-000	**7,99 €**
NI1000	(according to DIN EN 43760, class B, TKR = 6180 ppm / K)	7100-0020-9000-000	**9,51 €**
NI1000TK5000	(according to DIN EN 43760, class B, TKR = 5000 ppm / K), LG-Ni 1000	7100-0021-0000-000	**13,38 €**
NTC 1,8 KOHM	NTC 1.8 K	7100-0021-2000-000	**11,68 €**
NTC 10 KOHM PRECON	NTC 10 K Precon	7100-0021-9000-000	**6,11 €**
NTC 20 KOHM	NTC 20 K	7100-0021-6000-000	**6,11 €**
NTC 30 KOHM	NTC 30 K	7100-0021-7000-000	**6,11 €**
NTC 50 KOHM	NTC 50 K	7100-0021-8000-000	**6,11 €**
PT100 KLASSE B	(according to DIN EN 60751, class B)	7100-0020-1000-000	**7,34 €**
PT100 1/2 DIN	(according to DIN EN 60751, class B)	7100-0020-2000-000	**9,76 €**
PT100 1/3 DIN	(according to DIN EN 60751, class B)	7100-0020-3000-000	**11,36 €**
PT1000 KLASSE B	(according to DIN EN 60751, class B)	7100-0020-5000-000	**9,91 €**
PT1000 1/2 DIN	(according to DIN EN 60751, class B)	7100-0020-6000-000	**11,22 €**
PT1000 1/3 DIN	(according to DIN EN 60751, class B)	7100-0020-7000-000	**13,05 €**
PT1000 1/10 DIN	(according to DIN EN 60751, class B)	7100-0020-8000-000	**40,86 €**
Note:	Other sensors on request.		

Optional services / WG01		Unit	Price
Double sensor		**plus 50 %** of instrument price	
1 / 2 DIN	(according to DIN EN 60751, class B)	Per piece	**7,58 €**
1 / 3 DIN	(according to DIN EN 60751, class B)	Per piece	**7,58 €**
1 / 10 DIN	(according to DIN EN 60751, class B)	Per piece	**30,28 €**
Connection type	**4-wire connection** with ceramic base, head form B	Per piece	**6,30 €**
	4-wire connection with circuit board, box head	Per piece	**3,79 €**
Protection class	**IP 65** at head form B	Per piece	**9,72 €**
	IP 68 (Sensor sleeve watertight compound-filled) for cable sensors	Per piece	**3,50 €**

Custom-made products (for 25 or more pieces)			Unit	Price
Silicone-free sensor production			Per piece	on request!
Factory test certificate	1-point certificate		One-time cost	on request!
(per device)	2-point certificate		One-time cost	on request!
	3-point certificate		One-time cost	on request!
	Each additional test point		One-time cost	on request!
Custom-made products	Setup costs for custom-made products		One-time cost	on request!
Special paintwork	Set-up costs for special paintwork		one-off (net)	**195,38 €**
	plus costs for special paintwork	**from 25 piece**	per piece	**18,82 €**
		from 50 piece	per piece	**13,68 €**
Special print	Set-up costs incl. stereotype production, **1 colour**		one-off (net)	**195,38 €**
(with stereotype)	Set-up costs incl. stereotype production, **2 colour**		one-off (net)	**299,18 €**
	plus costs for special print	**from 25 piece**	per piece / colour	**11,86 €**
		from 50 piece	per piece / colour	**8,00 €**
		from 100 piece	per piece / colour	**6,43 €**
		from 250 piece	per piece / colour	**4,88 €**
		from 500 piece	per piece / colour	**2,44 €**
Printing customer logo on housing cover	Setup costs for printing on housing cover		One-time cost	on request!
(for 200 covers of one housing series)	Plus printing costs, 2-colour, printing on housing cover		Per piece	on request!
Labelling with customer logo	Setup costs for labelling		One-time cost	on request!
	Plus costs for labelling		Per piece	on request!