Ferrule fuse-links 14x51 gG 500 to 690VAC

LOW VOLTAGE IEC FUSES

IEC CYLINDRICAL FUSE-LINKS



Mersen aM and gG fuse-links cover a wide range of physical sizes and ampere ratings for 400, 500, and 690VAC for protection in electrical distribution circuits and various industrial applications. Most ratings are available in size 8x31 and size 10x38 with an optional indicator, and in size 14x51 and 22x58 with an optional striker to activate an auxiliary contact. Size 10x38 is also available with striker. All cylindrical fuse-links have ceramic bodies and silver-plated contacts.

Cylindrical fuse-links “gG” are used for the protection of cables, motors and LV-networks. They limit and cut off unacceptable overcurrents and short-circuit currents up to their nominal breaking capacity. Cylindrical fuse-links “gG” also protect electrical equipment and installations against the dynamic effect of high short-currents.

Our technology and process was designed to ensure highly reliable technical performance.

TECHNICAL DATA OVERVIEW

Voltage Range AC	500 ... 690 VAC
Voltage DC	250 VDC
Ampere Range (A)	1 ... 50 A
Speed/Characteristic	gG
I.R. AC (IEC)	120 kA
I.R. DC (IEC)	100 kA
Body Material	Ceramic
Body Style	Cylindrical
Contact Materials	Silver plated copper
Product Size	14x51 mm

FEATURES & BENEFITS

- Reduced size
- Full range protection
- Striker version available for remote indication of fuse operation
- Safest and most reliable protection system

APPLICATIONS

- gG type for protection of line, cable against overload and short circuit in various industrial application and electrical distribution circuits.

STANDARDS

- IEC 60269-1 & -2
- Approved by Lloyd’s Register of Shipping and Bureau Veritas

©2025 Mersen. All rights reserved. Mersen reserves the right to change, adapt, limit or discontinue its products. Therefore the data provided herein are for information only and are not contractually binding. To ensure that Mersen provides the best solution to your needs, please contact and provide Mersen with all relevant technical specifications and conditions.

Ferrule fuse-links 14x51 gG 500 to 690VAC

PRODUCT RANGE



FR14GG50V50

Size 14,3x51 gG 500/690VAC without indicator

Catalog number	Item number	Rated voltage AC (IEC)	Rated voltage DC (IEC)	Rated current I_n	Rated breaking capacity AC	Rated breaking capacity DC	Power dissipation at I_n	Weight
FR14GG69V1	K218716	690 V	250 V	1 A	120 kA	100 kA	0.6 W	21 g
FR14GG69V2	Y219234	690 V	250 V	2 A	120 kA	100 kA	0.75 W	21 g
FR14GG69V4	A219765	690 V	250 V	4 A	120 kA	100 kA	1.1 W	21 g
FR14GG69V6	H222210	690 V	250 V	6 A	120 kA	100 kA	1.25 W	21 g
FR14GG69V8	D222965	690 V	250 V	8 A	120 kA	100 kA	1.45 W	21 g
FR14GG69V10	L200754	690 V	250 V	10 A	120 kA	100 kA	1.65 W	21 g
FR14GG69V12	L201812	690 V	250 V	12 A	120 kA	100 kA	1.8 W	21 g
FR14GG69V16	A211554	690 V	250 V	16 A	120 kA	100 kA	2.35 W	21 g
FR14GG69V20	Z212588	690 V	250 V	20 A	120 kA	100 kA	2.75 W	21 g
FR14GG69V25	C213603	690 V	250 V	25 A	120 kA	100 kA	3.1 W	21 g
FR14GG69V32	L1010170	690 V	250 V	32 A	120 kA	100 kA	3.6 W	21 g
FR14GG69V40	P1010173	690 V	250 V	40 A	120 kA	100 kA	4 W	21 g
FR14GG69V50	Q1010174	690 V	250 V	50 A	120 kA	100 kA	4.8 W	21 g
FR14GG50V32	W216656	500 V	250 V	32 A	120 kA	100 kA	3.6 W	21 g
FR14GG50V40	X218198	500 V	250 V	40 A	120 kA	100 kA	4 W	21 g
FR14GG50V50	Z219235	500 V	250 V	50 A	120 kA	100 kA	4.8 W	21 g



FR14GG50V50P

Size 14,3x51 gG 500VAC with striker

Catalog number	Item number	Rated voltage AC (IEC)	Rated voltage DC (IEC)	Rated current I_n	Rated breaking capacity AC	Rated breaking capacity DC	Power dissipation at I_n	Weight
FR14GG50V2P	J211033	500 V	250 V	2 A	120 kA	100 kA	0.75 W	21 g
FR14GG50V4P	H212067	500 V	250 V	4 A	120 kA	100 kA	1.1 W	21 g
FR14GG50V6P	G214113	500 V	250 V	6 A	120 kA	100 kA	1.25 W	21 g
FR14GG50V8P	R215134	500 V	250 V	8 A	120 kA	100 kA	1.45 W	21 g
FR14GG50V10P	Z216153	500 V	250 V	10 A	120 kA	100 kA	1.65 W	21 g
FR14GG50V12P	L217176	500 V	250 V	12 A	120 kA	100 kA	1.8 W	21 g
FR14GG50V16P	Z218200	500 V	250 V	16 A	120 kA	100 kA	2.35 W	21 g
FR14GG50V20P	B219237	500 V	250 V	20 A	120 kA	100 kA	2.75 W	21 g
FR14GG50V25P	L222213	500 V	250 V	25 A	120 kA	100 kA	3.1 W	21 g
FR14GG50V32P	P200757	500 V	250 V	32 A	120 kA	100 kA	3.6 W	21 g
FR14GG50V40P	P201815	500 V	250 V	40 A	120 kA	100 kA	4 W	21 g
FR14GG50V50P	D211557	500 V	250 V	50 A	120 kA	100 kA	4.8 W	21 g

©2025 Mersen. All rights reserved. Mersen reserves the right to change, adapt, limit or discontinue its products. Therefore the data provided herein are for information only and are not contractually binding. To ensure that Mersen provides the best solution to your needs, please contact and provide Mersen with all relevant technical specifications and conditions.

TIME CURRENT CHARACTERISTIC CURVES

Size 14x51 690V gG

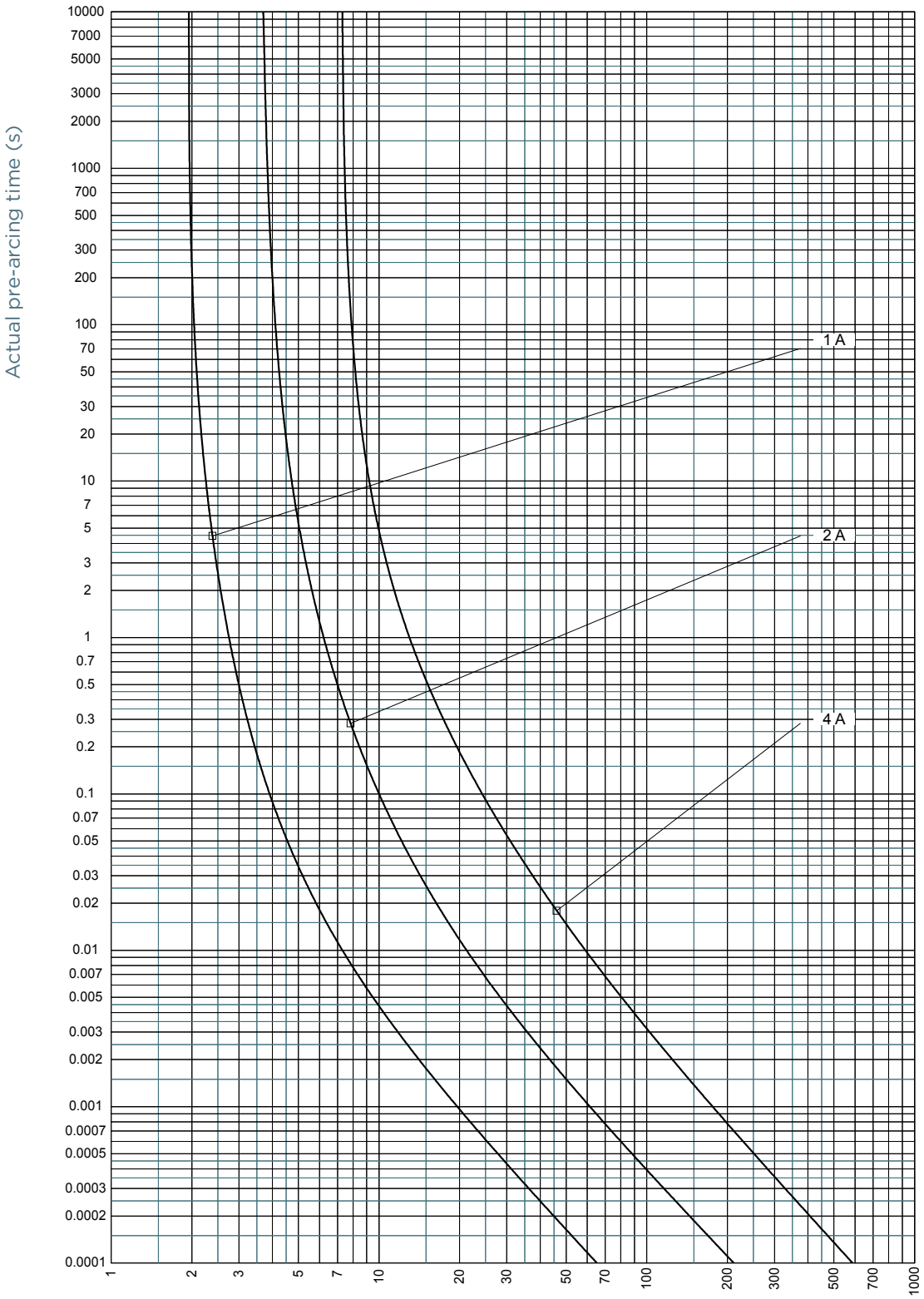

©2025 Mersen. All rights reserved. Mersen reserves the right to change, adapt, limit or discontinue its products. Therefore the data provided herein are for information only and are not contractually binding. To ensure that Mersen provides the best solution to your needs, please contact and provide Mersen with all relevant technical specifications and conditions.

TIME CURRENT CHARACTERISTIC CURVES

Size 14x51 690V gG

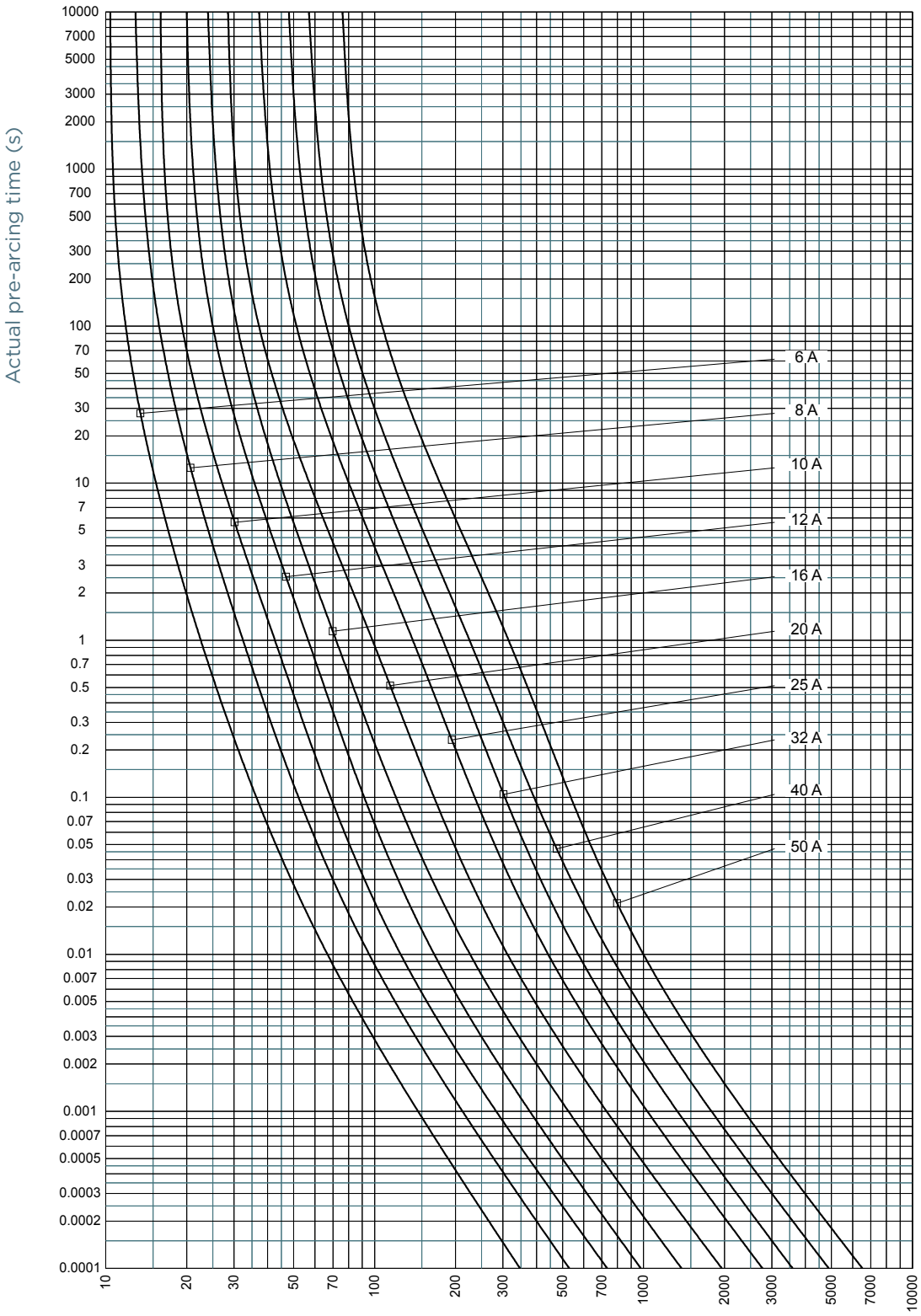

©2025 Mersen. All rights reserved. Mersen reserves the right to change, adapt, limit or discontinue its products. Therefore the data provided herein are for information only and are not contractually binding. To ensure that Mersen provides the best solution to your needs, please contact and provide Mersen with all relevant technical specifications and conditions.

CUT-OFF CURRENT CHARACTERISTIC

Size 14x51 690V gG

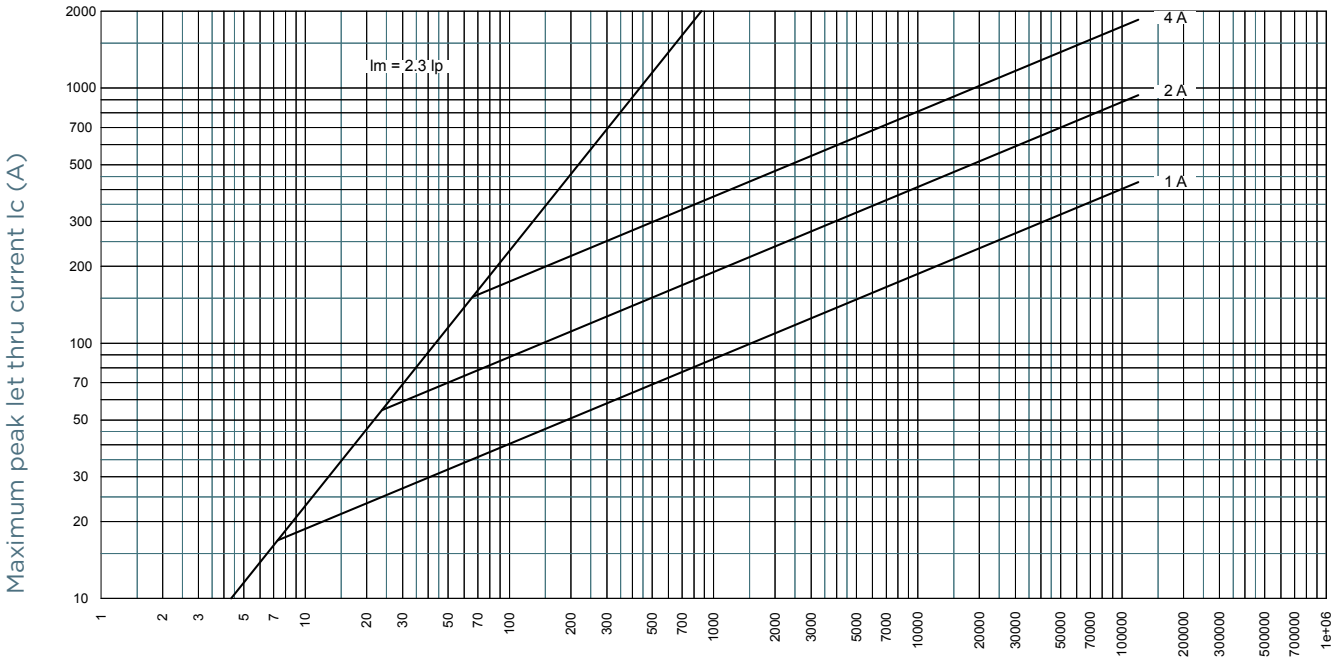

Size 14x51 690V gG

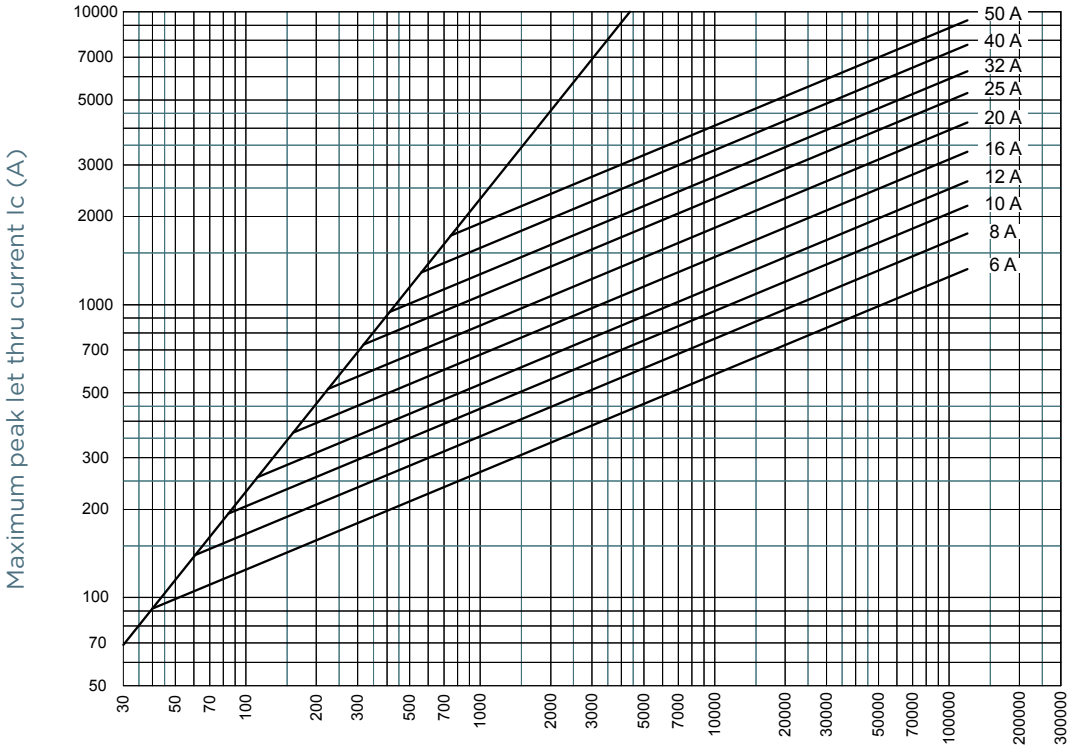

MERSEN.COM

©2025 Mersen. All rights reserved. Mersen reserves the right to change, adapt, limit or discontinue its products. Therefore the data provided herein are for information only and are not contractually binding. To ensure that Mersen provides the best solution to your needs, please contact and provide Mersen with all relevant technical specifications and conditions.

MERSEN Expertise, our source of energy

PRE-ARCING AND OPERATING I^2T CHARACTERISTICS

Size 14x51 690V gG

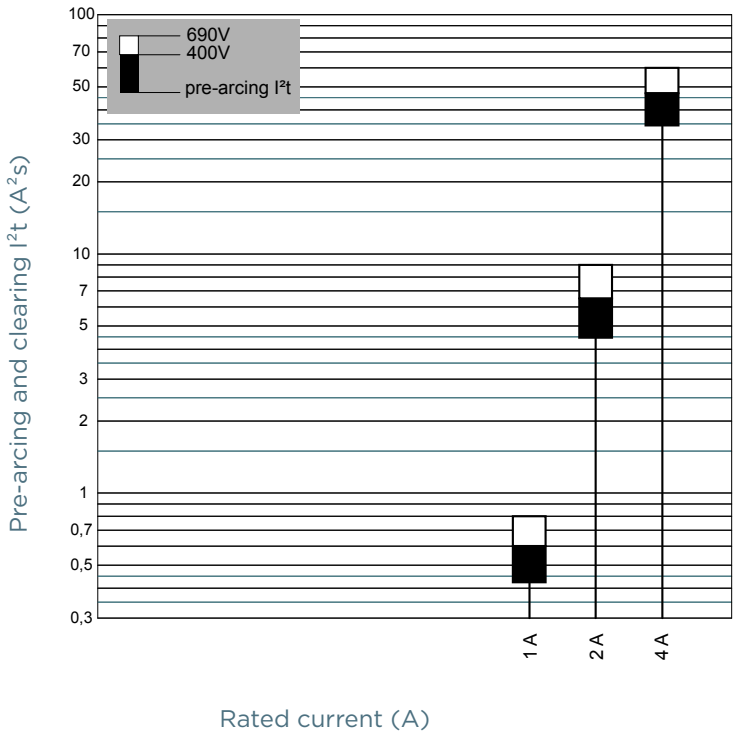

Size 14x51 690V gG

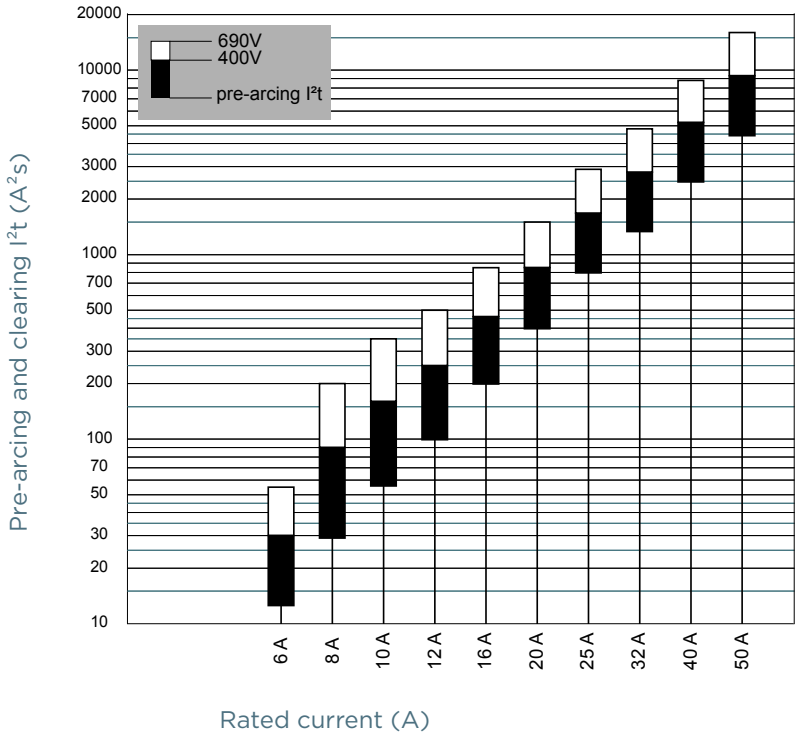

MERSEN.COM

©2025 Mersen. All rights reserved. Mersen reserves the right to change, adapt, limit or discontinue its products. Therefore the data provided herein are for information only and are not contractually binding. To ensure that Mersen provides the best solution to your needs, please contact and provide Mersen with all relevant technical specifications and conditions.

MERSEN Expertise, our source of energy

DIMENSIONS

Size 14x51 gG without indicator (1001212)

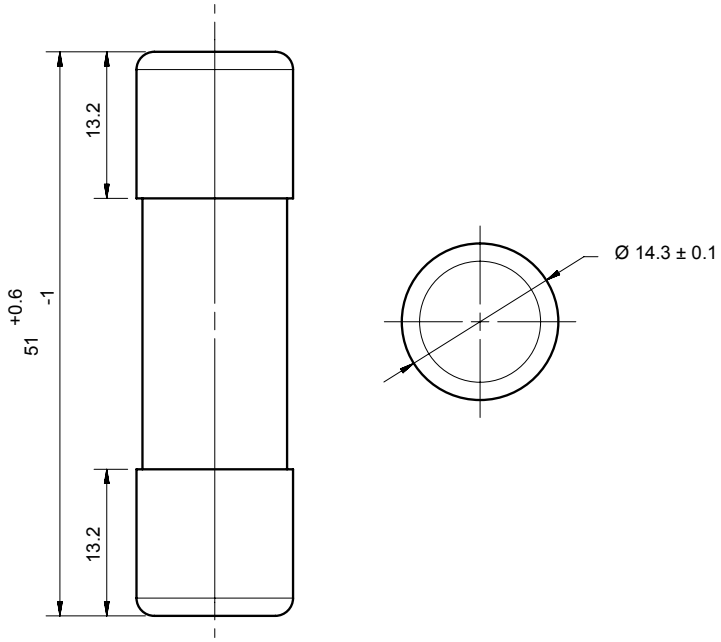

Dimensions in mm

Size 14x51 gG with striker (1001211)

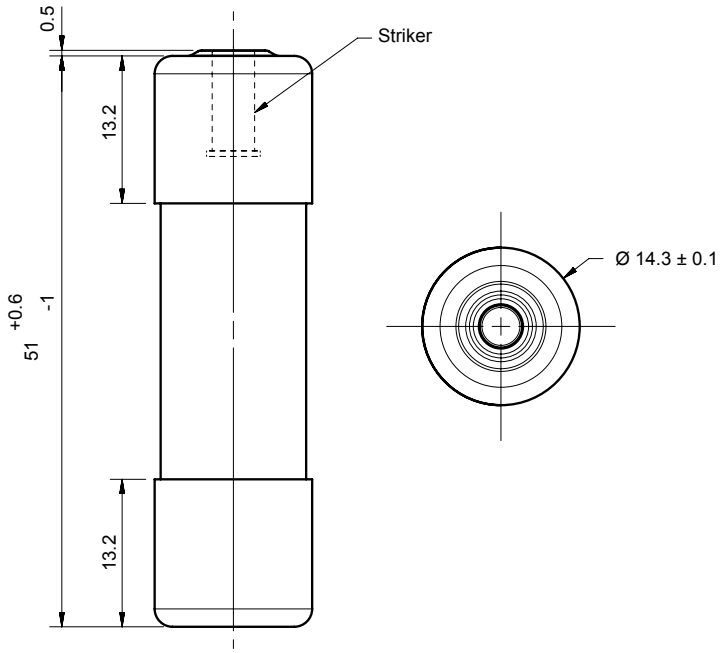

Dimensions in mm

MERSEN.COM

©2025 Mersen. All rights reserved. Mersen reserves the right to change, adapt, limit or discontinue its products. Therefore the data provided herein are for information only and are not contractually binding. To ensure that Mersen provides the best solution to your needs, please contact and provide Mersen with all relevant technical specifications and conditions.

Expertise, our source of energy