Mini free-standing Beacons / Flash Light 205

Flashing Beacon WM 24VDC YE



Part No.: 205.300.55

MECHANICAL DATA	
Height	107 mm
Diameter	58 mm
Materials	PA-GF PC
Dome colour	Yellow
Housing colour	Black
Protection category	IP65
Connection	Spring-type terminal
cross-sectional area maximum	2,50mm² / 14AWG
Cable entry	Screwed cable gland
Cable entry minimum	d = 3 mm
Cable entry maximum	d = 6 mm
Tension relief	Present (conforms to VDE)
Type of fixing	Wall mounting
Working temperature minimum	-20°C
Working temperature maximum	+50°C
Weight with packaging	117 g
Product weight	88 g

ELECTRICAL DATA	
Operating voltage	24V
Operating voltage type	DC
Operating voltage tolerance	+/- 10%
Rated operational voltage	24 VDC
Rated operational current	100 mA
Rated inrush current	500 mA
Protection class	Protection class 2
Pollution degree	3

OPTICAL DATA	
Light source	Xenon
Light colour	Yellow
Optical signal image	Flash
Flash frequency	0.75 Hz
Flash output	1 J
Service life optical	4 million flashes minimum

APPROVAL DATA	
Conforms with CE	Yes

! For additional installation and mounting information, refer to the appropriate user guide at www.werma.com. This printed copy is for information only and is subject to alteration.

Mini free-standing Beacons / Flash Light 205

Flashing Beacon WM 24VDC YE

WEEE	Yes
Conform with ATEX-directive	No
Conforms with CCC	No
Conforms with UL	cULus
UL Type Rating	Type 12
Conforms with FCC	No
Conforms with IC	No
EAC certificate available	Yes
Conforms with AS-I	No
ICAO Certification	No
Conforms with DNV	No
Conforms with RoHS CN	No
Conforms with VdS	No

DRAWING

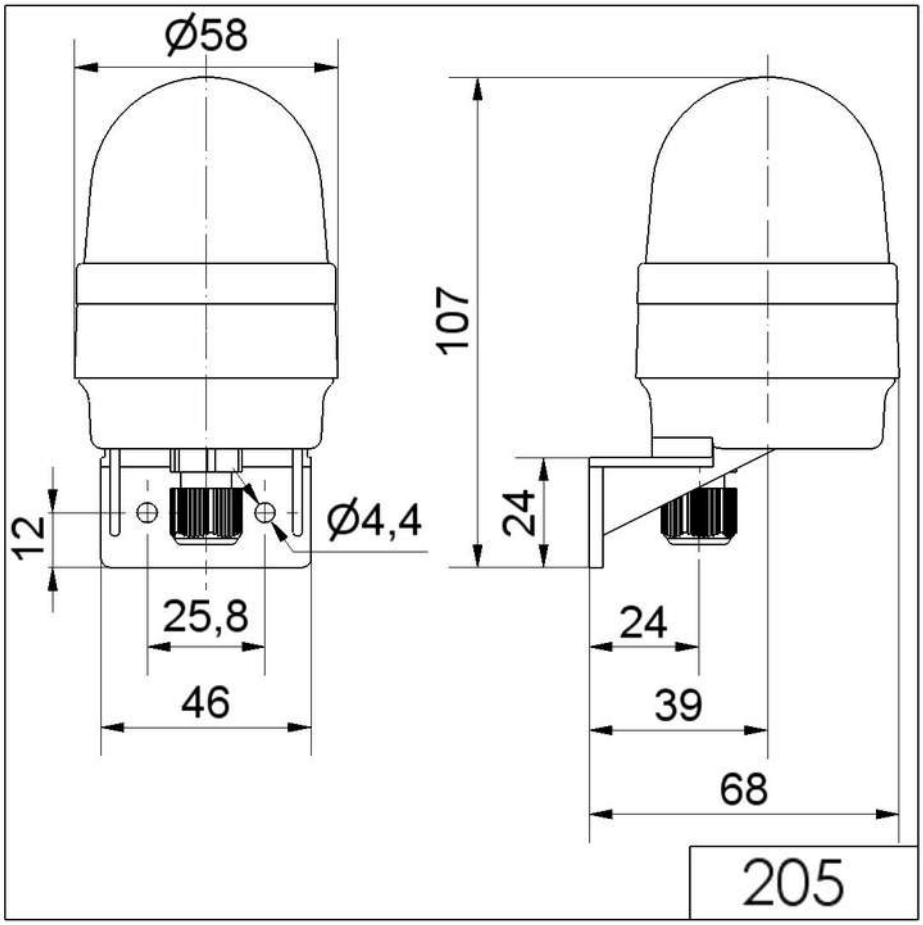

! For additional installation and mounting information, refer to the appropriate user guide at www.werma.com. This printed copy is for information only and is subject to alteration.