IFT206

Inductive sensor

IFB3004BBPKG/M/V4A/6M/WH

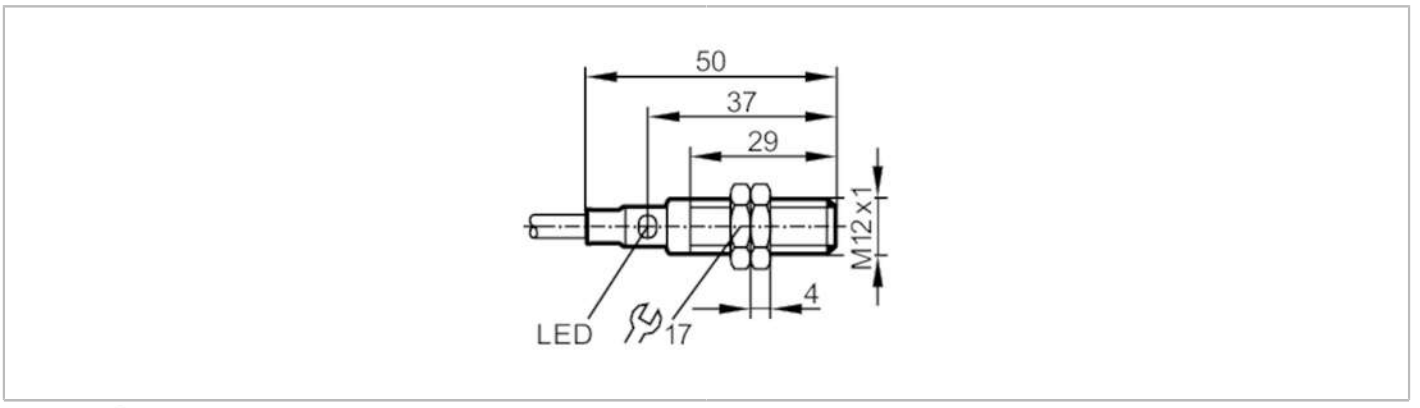

EC 1935/2004

Product characteristics		
Electrical design		PNP
Output function		normally open
Sensing range	[mm]	4
Housing		threaded type
Dimensions	[mm]	M12 x 1 / L = 50
Application		
Special feature		Increased sensing range
Application		regular cleaning processes
Electrical data		
Operating voltage	[V]	10...36 DC
Current consumption	[mA]	10; (24 V)
Protection class		II
Reverse polarity protection		yes
Outputs		
Electrical design		PNP
Output function		normally open
Max. voltage drop switching output DC	[V]	2.5
Permanent current rating of switching output DC	[mA]	100
Switching frequency DC	[Hz]	800
Short-circuit protection		yes
Type of short-circuit protection		pulsed
Overload protection		yes
Detection zone		
Sensing range	[mm]	4
Operating distance	[mm]	0...3.25
Increased sensing range		yes
Accuracy / deviations		
Correction factor		steel: 1 / stainless steel: 0.7 / brass: 0.5 / aluminium: 0.4 / copper: 0.3

IFT206

Inductive sensor

IFB3004BBPKG/M/V4A/6M/WH

Hysteresis	[% of Sr]	1...20	
Operating conditions			
Ambient temperature	[°C]	0...100	
Protection		IP 68; IP 69K; ("COP")	
Tests / approvals			
EMC		EN 61000-4-2 ESD	4 kV CD / 8 kV AD
		EN 61000-4-3 HF radiated	10 V/m
		EN 61000-4-4 Burst	2 kV
		EN 61000-4-5 Surge	0,5 kV line to line, Ri: 2 Ohm
		EN 61000-4-6 HF conducted	10 V
		EN 55011	class B
MTTF	[years]	1669	
UL approval		Ta	0...40 °C
		Enclosure type	Type 1
		power supply	Limited Voltage/Current
		File number UL	E174191
Mechanical data			
Weight	[g]	250.5	
Housing		threaded type	
Mounting		flush mountable	
Dimensions	[mm]	M12 x 1 / L = 50	
Thread designation		M12 x 1	
Materials		stainless steel (1.4404 / 316L); sensing face: PEEK	
Displays / operating elements			
Display		switching status	1 x LED, yellow
Accessories			
Items supplied		lock nuts: 2	
Remarks			
Pack quantity		1 pcs.	
Electrical connection			

Cable: 6 m, PVC, Ø 4.9 mm; 3 x 0.34 mm²

Connection

