E30128

Cover plug for process connections

ADAPTER PLUG ASEPTOFLEX VARIO

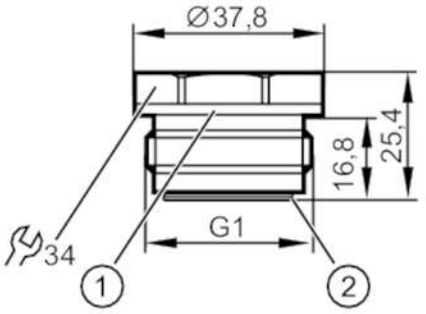

1 groove for sealing ring DIN 3869-33-FKM
2 groove for O-ring 24 x 2 (EPDM) or optional sealing rings

EC 1935/2004 EHEDG Certified FDA

Tests / approvals		
Pressure Equipment Directive		A possible classification to PED depends on the application and has to be carried out by the user / operator.
Pressure Equipment Directive EAC		The adapter is intended for use in devices, machines and installations that do not fall under the categories of the technical rule TR CU 032/2013.
Safety instructions		The compatibility between medium and product material has to be checked in all applications.
Mechanical data		
Weight	[g]	203
Materials (wetted parts)		stainless steel (1.4435 / 316L) surface characteristics : Ra<0,4 / Rz 4; Gasket: FKM
Process connection		threaded connection G 1 external thread Aseptoflex Vario
Accessories		
Items supplied		O-rings: 1 x 24 x 2 (EPDM), in contact with the medium, E30054
		O-rings: 1, DIN 3869-33-FKM
Accessories (optional)		O-ring: 24 x 2 (FKM), in contact with the medium, E30123
		sealing ring: PEEK, in contact with the medium, E30124
Remarks		
Pack quantity		1 pcs.