Original instructions

Tina 7A

Adaptor unit

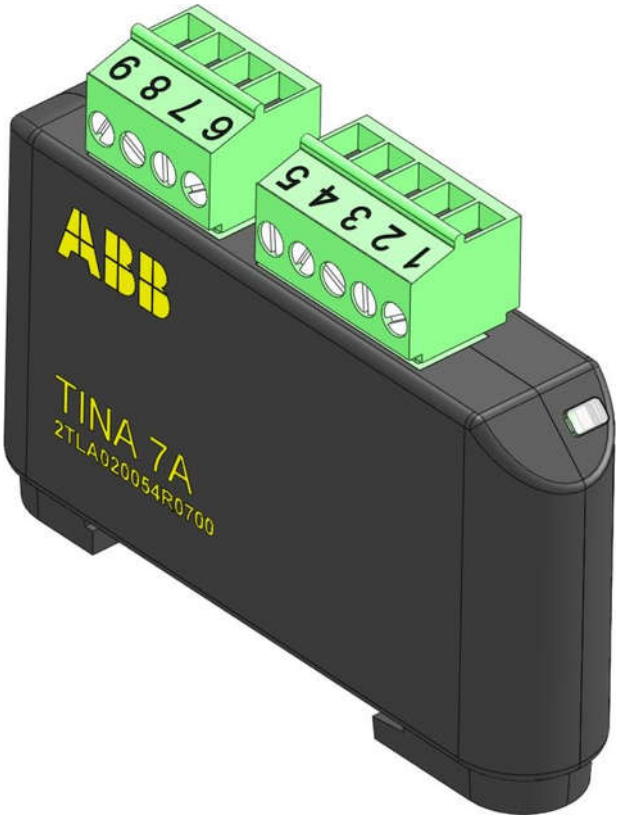

ABB AB / Jokab Safety Varlabergsvägen 11, SE-434 39 Kungsbacka, Sweden
www.abb.com/lowvoltage

Read and understand this document

Please read and understand this document before using the products. Please consult your ABB/JOKAB SAFETY representative if you have any questions or comments.

WARRANTY

ABB/JOKAB SAFETY's exclusive warranty is that the products are free from defects in materials and workmanship for a period of one year (or other period if specified) from date of sale by ABB/JOKAB SAFETY.

ABB/JOKAB SAFETY MAKES NO WARRANTY OR REPRESENTATION, EXPRESSED OR IMPLIED, REGARDING NON-INFRINGEMENT, MERCHANTABILITY, OR FITNESS FOR PARTICULAR PURPOSE OF THE PRODUCTS, ANY BUYER OR USER ACKNOWLEDGES THAT THE BUYER OR USER ALONE HAS DETERMINED THAT THE PRODUCTS WILL SUITABLY MEET THE REQUIREMENTS OR THEIR INTENDED USE. ABB/JOKAB SAFETY DISCLAIMS ALL OTHER WARRANTIES, EXPRESSED OR IMPLIED.

LIMITATIONS OF LIABILITY

ABB/JOKAB SAFETY SHALL NOT BE RESPONSIBLE FOR SPECIAL, INDIRECT, OR CONSEQUENTIAL DAMAGES, LOSS OF PROFITS OR COMMERCIAL LOSS IN ANY WAY CONNECTED WITH THE PRODUCTS, WHETHER SUCH CLAIM IS BASED ON CONTRACT, WARRANTY, NEGLIGENCE, OR STRICT LIABILITY.

In no event shall responsibility of ABB/JOKAB SAFETY for any act exceed the individual price of the product on which liability asserted.

IN NO EVENT SHALL ABB/JOKAB SAFETY BE RESPONSIBLE FOR WARRANTY, REPAIR, OR OTHER CLAIMS REGARDING THE PRODUCTS UNLESS ABB/JOKAB SAFETY'S ANALYSIS CONFIRMS THAT THE PRODUCTS WERE PROPERLY HANDLED, STORED, INSTALLED, AND MAINTAINED AND NOT SUBJECT TO ABUSE, MISUSE, OR INAPPROPRIATE MODIFICATION OR REPAIR.

SUITABILITY FOR USE

ABB/JOKAB SAFETY shall not be responsible for conformity with any standards, codes, or regulations that apply to the combination of products in the customer's application or use of the product. At the customer's request, ABB/JOKAB SAFETY will provide applicable third party certification documents identifying ratings and limitations of use that apply to the products. This information by itself is not sufficient for a complete determination of the suitability of the products in combination with the end product, machine, system, or other application or use.

The following are some examples of applications for which particular attention must be given. This is not intended to be an exhaustive list of all possible uses of the products, nor is it intended to imply that the uses listed may be suitable for the products:

Outdoor use, uses involving potential chemical contamination or electrical interference, or conditions or uses not described in this document.

Nuclear energy control systems, combustion systems, railroad systems, aviation systems, medical equipment, amusement machines, vehicles, and installations subject to separate industry or government regulations.

Systems, machines, and equipment that could present a risk to life or property.

Please know and observe all prohibitions of use applicable to the products.

NEVER USE THE PRODUCTS FOR AN APPLICATION INVOLVING SERIOUS RISK TO LIFE OR PROPERTY WITHOUT ENSURING THAT THE SYSTEM AS A WHOLE HAS BEEN DESIGNED TO ADDRESS THE RISKS, AND THAT THE ABB/JOKAB SAFETY PRODUCT IS PROPERLY RATED AND INSTALLED FOR THE INTENDED USE WITHIN THE OVERALL EQUIPMENT OR SYSTEM.

PERFORMANCE DATA

While every effort has been taken to ensure the accuracy of the information contained in this manual ABB/JOKAB SAFETY cannot accept responsibility for errors or omissions and reserves the right to make changes and improvements without notice. Performance data given in this document is provided as a guide for the user in determining suitability and does not constitute a warranty. It may represent the result of ABB/JOKAB SAFETY'S test conditions, and the users must correlate it to actual application requirements. Actual performance is subject to the ABB/JOKAB SAFETY Warranty and Limitations of Liability.

Table of Contents

1 Introduction 4

Scope 4

Audience 4

Prerequisites 4

Special notes 4

2 Overview 5

General description 5

Safety regulations 5

3 Connections 6

Connection examples 7

4 Installation and maintenance 8

Installation precautions 8

Maintenance 8

Testing of the safety functions 8

Troubleshooting 8

5 Operation 9

LED indication 9

Information output signal attributes 9

6 Technical data 10

Dimensions 11

7 EC Declaration of conformity 12

1 Introduction

Scope

The purpose of these instructions is to describe the adaptor unit Tina 7A and to provide the necessary information required for installation and operation.

Audience

This document is intended for authorized installation personnel.

Prerequisites

It is assumed that the reader of this document has knowledge of the following:

- Basic knowledge of ABB/Jokab Safety products.
- Knowledge of machine safety.

Special notes

Pay attention to the following special notes in the document:

⚠ **Warning!**	Danger of severe personal injury! An instruction or procedure which, if not carried out correctly, may result in injury to the technician or other personnel.
Caution!	Danger of damage to the equipment! An instruction or procedure which, if not carried out correctly, may damage the equipment.
NB:	Notes are used to provide important or explanatory information.

2 Overview

General description

ABB/Jokab Safety adaptor units are used to adapt conventional safety sensors where the safety relies on e.g. one- or two-channel static signals, OSSD outputs, or short circuit detection, to the dynamic safety circuit monitored by a Vital safety module or Pluto safety-PLC.

Tina 7A is used to adapt safety sensors with mechanical contacts to the dynamic safety circuit. Examples of such safety sensors are emergency stops and switches or light curtains and light beams with internal relay outputs. The unit is also able to monitor short circuits and can therefore also adapt safety sensors with safety contact rails, or safety mats with internal relay outputs, to the dynamic safety circuit.

Tina 7A is intended for use inside electrical cabinets where it can be mounted on 35 mm DIN rails and connection cables can be connected directly to screw terminal blocks on the unit. Tina 7A is also equipped with a LED for visual status information of the safety sensor and the dynamic safety circuit.

The Tina 7A adaptor unit is intended for use in safety circuits in accordance with EN 60204-1.

⚠ **Warning!** In order to maintain the highest safety level and reduce the risk of electrical interference the unit must be installed within the same physical encapsulation as the safety device. The connection cables should be as short as possible (max 150 mm).

Safety regulations

⚠ **Warning!**

Carefully read through this entire manual before using the device.

The devices shall be installed by a trained electrician following the Safety regulations, standards and the Machine directive.

Failure to comply with instructions, operation that is not in accordance with the use prescribed in these instructions, improper installation or handling of the device can affect the safety of people and the plant.

For installation and prescribed use of the product, the special notes in the instructions must be carefully observed and the technical standards relevant to the application must be considered.

In case of failure to comply with the instructions or standards, especially when tampering with and/or modifying the product, any liability is excluded.

3 Connections

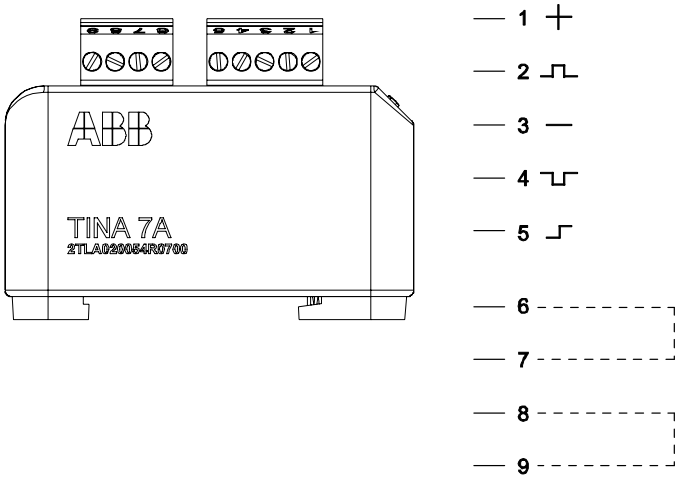

9-pin connection block:

1) +24 VDC
2) Dynamic signal input
3) 0 VDC
4) Dynamic signal output
5) Information
6) Loop-A1
7) Loop-A2
8) Loop-B1
9) Loop-B2

NB: Shielded cable is recommended between this unit and the rest of the safety circuits.

Caution! The safety loop cables (connected to terminals 6-9) should not be longer than 150 mm. The cables should be as short as possible as longer cables increase the risk for electrical interference.

⚠ **Warning!**

The information channel output shall never be used for the safety purpose(s).

The safety loops are not monitored and must therefore be installed within the same physical enclosure (e.g. electrical cabinet) as the safety device to maintain the highest safety level (fault exclusion, refer to EN ISO 13849-2:2003 Annex D).

The safety loops shall not be used for purposes other than intended. All loading or tampering with loops can lead to serious risk of life.

Connection examples

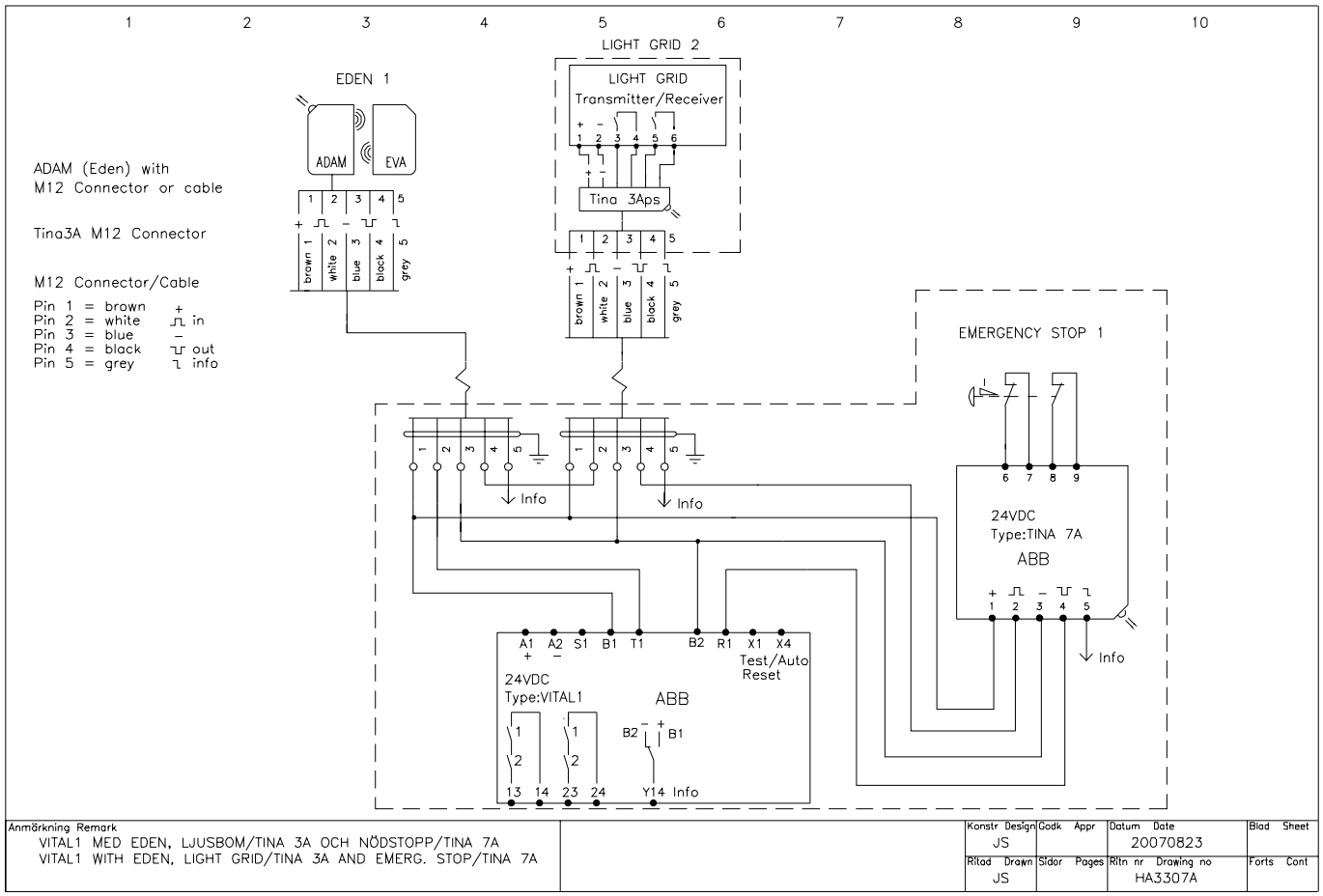

Caution! All cable colours according to ABB/Jokab Safety standard cables.

4 Installation and maintenance

Installation precautions

First attach the unit on a 35 mm DIN rail. Then attach the safety-loop to the connection block (nr 6-9). Finally, attach the cables to the connection block (nr 1-5).

⚠ **Warning!** All the safety functions must be tested before starting up the system.

Maintenance

⚠ **Warning!**

The safety functions and the mechanics shall be tested regularly, at least once every year to confirm that all the safety functions are working properly (EN 62061:2005).

In case of breakdown or damage to the product, contact the nearest ABB/Jokab Safety Service Office or reseller. Do not try to repair the product yourself since it may accidentally cause permanent damage to the product, impairing the safety of the device which in turn could lead to serious injury to personnel.

Testing of the safety functions

Make sure the safety unit is working properly by following these steps:

- Interrupt the dynamic safety circuit before this unit. The LED should flash between green and red.
- Interrupt protection. The LED should light red.
- The LED should light green when protection is OK and if the safety circuit(s) before this unit is not interrupted.

Troubleshooting

LED indication	Expected causes of faults	Checking and measures to take
Lights red	Sensor open	Check status of the sensor
	Bad connection between loops	Check terminals at the unit
	24 VDC input to pin-2 (no dynamic signal)	Check if there is 24 VDC to input (pin-2). If Yes, check cable or unit before and fix it.
No lights	Loss of power supply	Check 24 VDC / 0 VDC power supply
Lights green (but no dynamic output detected)	Defected dynamic signal input to unit (asymmetric pulses)	Check the dynamic input or the unit before
Weak lights or red and green lights at the same time	The unit is defect	The unit needs to be replaced. Contact ABB/Jokab Safety.

⚠ **Warning!** Replace defected unit with a new one and never bypass the safety circuit using Tina 1A or any other solution.

5 Operation

LED indication

LED	Indication	Description	Input signal on pin-2
LED on Tina	Green	Safety circuit closed (protection OK)	Dynamic signal in
	Green-Red (flash)	Safety circuit open (protection OK)	No dynamic signal in or 0 VDC in
	Red	Safety circuit interrupted (protection open)	+24 VDC in or safety circuit interrupted

Information output signal attributes

The information output of the unit (pin-5) is set either high (+24 VDC) or low (0 VDC) depending on four different input signals (pin-2):

- **Dynamic signal** - Dynamic signal input exist, i.e. the safety circuit is OK up until this unit
- **No dynamic signal** - Dynamic signal input does not exist, i.e. the safety circuit is interrupted before this unit.
- **+24 VDC** - A constant +24 VDC signal is applied = high (H)
- **0 VDC** - The pin is connected to 0 VDC = low (L)

The information output signal depends on the input signal according to the table below. Note that if the safety is interrupted the information output signal is always low (L).

Input signal (pin-2)	Dynamic signal	No dynamic signal	+24 VDC	0 VDC
Info output signal (pin-5)	High	High	Low	High

The delay for switching the information signal output from high to low (H → L) and low to high (L → H) is given in the table below.

Info output signal switch	H → L	L → H
Delay	~ 12 ms	~ 0 ms

NB: If the unit detects an error (short circuit or interruption) lasting shorter than 13 ms the information output signal is set to low for 1.2 s (1200 ms) and then set to high again. This does not affect Vital since it needs 38 ms to release. Pluto however does release, which means that a filter (20 ms) must be implemented if this function is needed.

⚠ **Warning!** The information output signal is not a failsafe signal and should **never** be used for the safety purpose(s).

6 Technical data

Manufacturer	
Address	ABB AB / JOKAB SAFETY Varlabergsvägen 11 SE-434 39 Kungsbacka Sweden
Article number/Ordering data	Tina 7A: 2TLA020054R0700

Power supply	
Operating voltage	24 VDC +15 %, -25 %
Total current consumption	47 mA (57 mA with max information output) Information output: Max 10 mA
Current through safety device contacts	12 mA
Short circuit current between contacts	10 mA
Time delay t (in/out)	t < 70 µs
Voltage supply at normal operation (protection OK) and 24 VDC supply voltage	Dynamic input: between 9 and 13 volt (RMS) Dynamic output: between 9 and 13 volt (RMS) Information output: ~ 23 VDC

General	
Protection class	IP20
Ambient temperature	Storage: -30…+70°C Operation: -10…+55°C
Humidity range	35 to 85 % (with no icing or condensation)
Housing material	PVC
Connectors	5-pin connection block (power supply, dynamic in/out, info) 4-pin connection block (safety loop A1-A2, B1-B2)
Mounting	DIN-rail
Size	62 x 46 x 13 (L x W x H)
Weight	~ 35 g
Colour	Black

Safety / Harmonized Standards	
Conformity	European Machinery Directive 2006/42/EC CE EN ISO 12100-1:2003, EN ISO 12100-2:2003, EN 60204-1:2007, EN 954-1:1996, EN ISO 13849-1:2008, EN 62061:2005
IEC/EN 61508-1…7	SIL3, PFH_d: $4.50*10^{-9}$
EN 62061	SIL3
EN ISO 13849-1	Performance level: Pl e, category 4
EN 954-1	Category 4
Certificates	TÜV Nord

Dimensions

Tina 7A

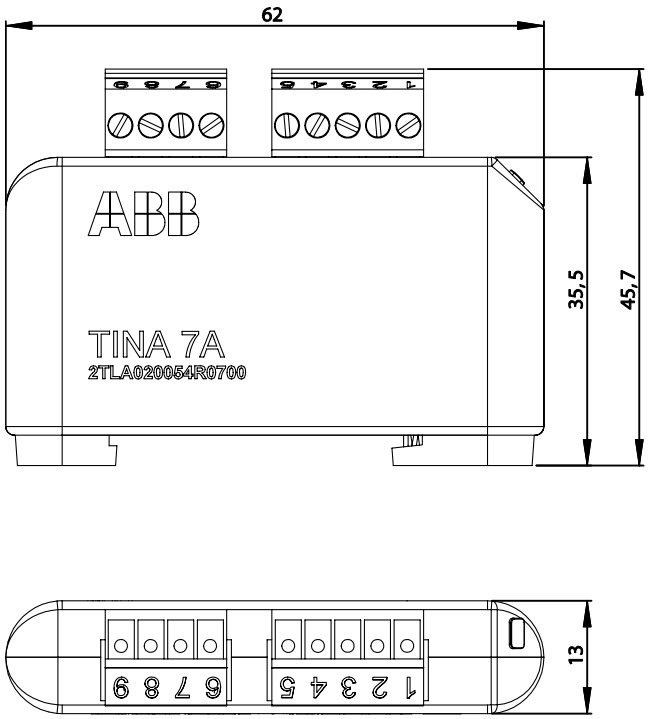

NB: All measurements in millimetres.

7 EC Declaration of conformity

EC Declaration of conformity

(according to 2006/42/EC, Annex2A)

We	ABB AB JOKAB SAFETY Varlabergsvägen 11 SE-434 39 Kungsbacka Sweden	declare that the safety components of ABB AB make with type designations and safety functions as listed below, is in conformity with the Directives 2006/42/EC 2006/95/EC 2004/108/EC
Person authorised to compile the technical file		Lars-Magnus Felth ABB AB JOKAB SAFETY Varlabergsvägen 11 SE-434 39 Kungsbacka Sweden

Product	**Certificate**	**Serialnumber**
Non-contact safety sensor Eden (Adam , Eva) E/C/EC	44 207 10 372092-001	[000 – 000 ... 999-999]
Adapter unit Tina 1-8, Tina 10-12	44 207 10 372092-001	[000 – 000 ... 999-999]
Muting unit FMC-Tina	44 207 10 372092-001	[000 – 000 ... 999-999]
Non-contact safety sensor including locking function Magne 2A, 2B, 2AX, 2BX	44 207 10 372092-001	[000 – 000 ... 999-999]

Notified body

TÜV NORD CERT GmbH
Langemarckstrasse 20
45141 Essen
Germany

Notified body No. 0044

Used harmonized standards

EN ISO 12100-1,-2, EN 954-1, EN ISO 13849-1, EN 62061, EN 60204-1, IEC 60664-1, EN 61000-6-2, EN 61000-6-4, EN 60947-5-1, EN 1088

Mats Linger
MD
Kungsbacka 2011-03-02

www.abb.com
www.jokabsafety.com

Original