Amphenol
Advanced Sensors

Product Data Sheet

Part Name	ZTPD-2210	Part No.	IRF042M00-00A0	Rev.	0.0

Datasheet of
Digital output thermopile Detector

Product Name: ZTPD- 2210

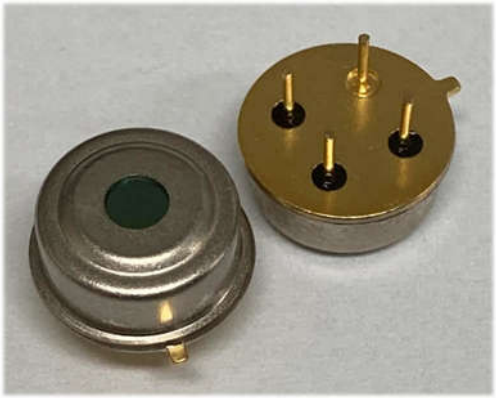

☒ The information and design authority contained in this document is proprietary to Amphenol Advance Sensors and could be shared with any customers to promote.

☐ The information and design authority contained in this document is proprietary to Customer and shall not be disclosed in whole or in part in any form or for any reason.
You are required to contact with Amphenol Advance Sensors product management for more information or any help

☐ The information and design authority contained in this document is generated by Amphenol Advance Sensors & Customer and shall not be disclosed in whole or in part in any form or for any reason.
You are required to contact with Amphenol Advanced Sensors product management for more information or any help.

Part Name	ZTPD-2210	Part No.	IRF042M00-00A0	Rev.	0.0

1. Description

ZTPD-2210 is an Infrared Thermopile detector with digital calibrated output for non-contact temperature detection. This sensor measurement detection range is -20℃ ~ 100℃

2. Feature of ZTPD-2210

- ◆ Factory calibrated temperature range
  - Standard type detection range : -20℃ ~ 100℃
  - Normal sensor operation range : -20℃ ~ 85℃
  - Sensor storage temperature range : -40℃ ~ 100℃
- ◆ Ambient temperature compensation
- ◆ I^2C Interface
- ◆ Sleep mode for energy saving
- ◆ RoHS and REACH compliance product

3. Application

- ◆ Non-contact thermometer
- ◆ Temperature sensing for automotive cabin and building HVAC system
- ◆ Home appliance(Microwave oven, Refrigerator, Coffer machine, etc)
- ◆ Healthcare (Human body temperature detection)

4. Sensor Block Diagram

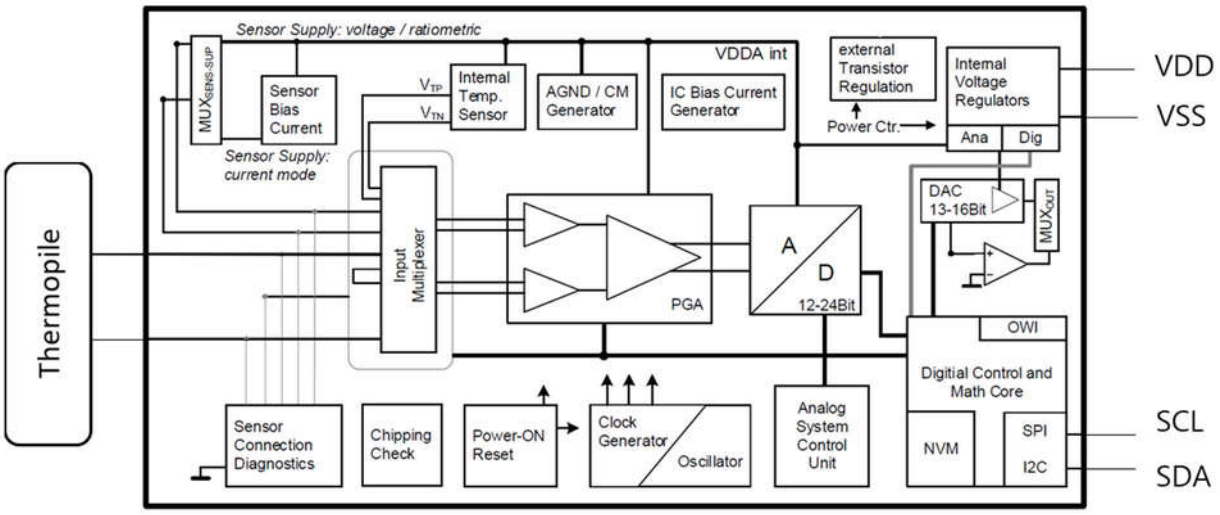

5. Electrical Characteristic

Parameter		LIMITS			UNIT	CONDITION
		MIN	TYP	MAX		
Supply Voltage		2.7		5.5	V	
Current Consumption	Active		1.0		mA	@25℃
	Sleep		0.02	0.25	uA	
Object Temp. Range (1)		-20		100	℃	
Operating Temp. Range(1)		-20		85	℃	
Storage Temp. Range		-40		100	℃	
Accuracy			1.0		℃	@25℃
Resolution				24	bit	
ADC Clock Frequency		0.9		1.1	MHz	Internal ADC clock
Start-up Time				1	ms	VDD ramp up to interface communication
				2.5	ms	VDD ramp up to analog operation
I^2C Clock Frequency				3.4	MHz	

*** Notes**

(1) : Object and operating temperature in excess of min/max value, sensor output will provide fixed(Min/Max) temperature value

6. Absolute Maximum Rating

Parameter	Symbol	Conditions	LIMITS			UNIT
			MIN	TYP	MAX	
Analog supply voltage	V_{DD_Max}	Referenced to VSS	-0.3		6.5	V
Voltage at digital interface pins	V_{IF_max}	I2C pins: SDA, SCL	-0.5		5.5	V
Electrostatic Discharge Tolerance -Human body Model(HBM1)	V_{HBM1}				4000	V
Storage Temperature	T_{STPR}		-40		125	℃

Part Name	ZTPD-2210	Part No.	IRF042M00-00A0	Rev.	0.0

7. Optics characteristic

Parameter	LIMITS			Units	Condition
	Min	Typ	Max		
Field of View		90		Degree	50% of Maximum Output

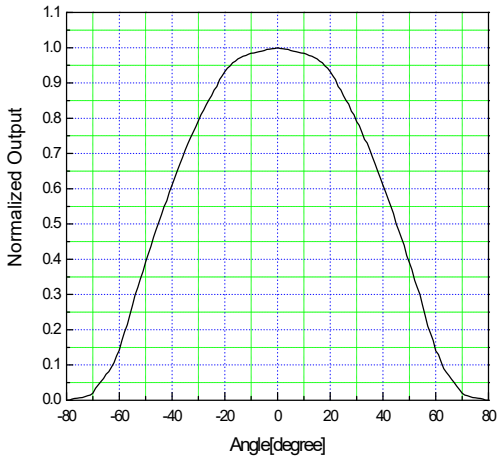

8. Mechanical dimension and pin connection

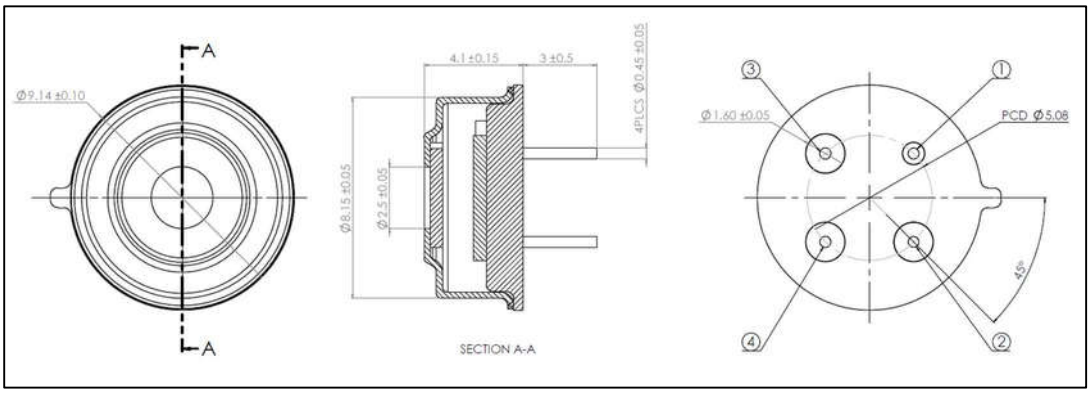

*** Pin layout**
1. GND
2. SDA
3. VDD
4. SCL

*** Notes : Sensor lead(pin) plated by Au.**

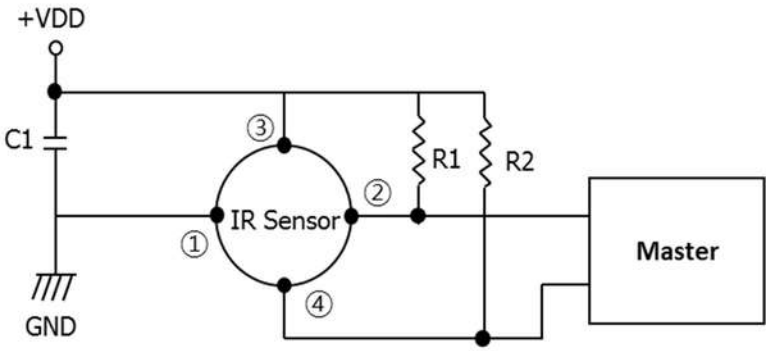

Remark
- R1, R2(Full up resistor) : 2.2 ~ 10Kohm
- C1(Decoupling capacitor) : 100nF

9. Digital Interface

9.1 General Status Byte and Mode Status

Bit-Number	7	6	5	4	3	2	1	0
Meaning	0	Powered?	Busy?	Mode		Memory Error?	Connection Check Fault?	Math Saturation

Status[4:3]	Mode
00	Command Mode
01	Cyclic Mode
10	Sleep Mode
11	Renesas reserved

9.2 Temperature data read(with I²C)

Read Data (I²C™ Read)

(a) Example : after the completion of a Memory Read command

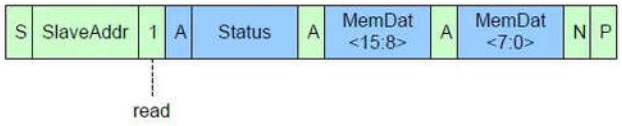

(b) Example : after the completion of a Full Measurement command(AA_{HEX})

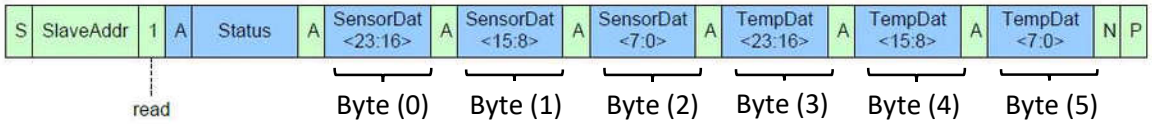

9.3 I2C interface parameter

Parameter	Conditions	Min	Typ	Max	Units
Internal clock		0.1	-	3.4	MHz
Duty cycle		33	-	50	%
Sampling Interval				80	msec
Input high level voltage	Referenced to external supply voltage VDD.	0.7	-	1.0	V_{DD}
Input low level voltage		0.0	-	0.3	V_{DD}
Capacitive load at input pin, SDA	100pF: maximum for Standard and Fast Mode; in HS Mode fSCL,max = 3.4MHz 400pF: only in HS Mode; fSCL,max = 1.7MHz		100	400	pF
Low level output current	VSDA=0.4V; Standard and Fast Mode with 400kHz; 400pF load	3	6	40	mA

9.3 I²C Command

Sensor	I2C Address	Command	Description
ZTPD-2210	0x38	0xAA	Read Target and Sensor temperature

9.4 Temperature Calculation

- **Send value : 0x38, 0xAF**
- **Object temperature output calculation**
  - Return value: Byte(0): 0x78, Byte(1): 0x32, Byte(2) : 0xF7
  - Output Temperature = ((Byte(0)Byte(1)Byte(2))/2^24)*130-20

    = (7877367/16777216)*130-20 = **41.0℃**

- **Ambient temperature output calculation**
  - Return value: Byte(3): 0x74, Byte(4): 0xBD, Byte(5): 0x71
  - Output Temperature = ((Byte(3)Byte(4)Byte(5))/2^24)*105 - 20

    = (7427142/16777216)*105 – 20 = **26.5℃**

10. Reliability Standard

10.1 Acceptance Criteria

- At the end of test, remove the components from the chamber and then rest for 2hours under a room temperature.

Parameter	Test condition	Output change
High Temperature	120℃ for 1000 hours	< 3%
Low Temperature	-20℃ for 1000 hours	< 3%
Temperature cycle	-20℃ to 85℃ Profile : 2 hours transition time, 2 hours dwell time, total 30 cycle	< 3%
Free fall drop	Free fall drop from 100cm height on wooden plate	< 3%
Vibration	10 to 55Hz, 1.5mm displacement, 10Hz-55Hz-10Hz(each 1 minute), 2 hours for X,Y,X each direction	< 3%

11. Handling and Precautions

11.1 Humidity

IR detector operation should under without condensation condition

11.2 ESD Precautions

IR detector(electronic semiconductor) is Electro static discharge(ESD) device. Prevent damages, applying precautions necessary for ESD devices.
Do not apply physical force to detector leads and window.
Do not expose detector to aggressive detergents such as freon, trichloroethylene, etc.

11.3 Soldering

Manual soldering and standard wave soldering process may be applied.
(EIA/JEDEC JESD22-B106E : Resistance to Solder Shock for Through-Hole Mounted Devices)
Resistance to soldering temperature for through-hole mounted devices

11.4 Moisture Sensitivity Level(MSL)

Amphenol IR sensor MSL rating : Grade 1