212883
US 12 M 400 G3-B4
Ultrasonic sensor

- IO-Link
- Configurable as an ultrasonic sensor or barrier
- 3 different teach modes
- Working range adjustable
- Very narrow detection beam / small blind zone
- Switching functions: Closer/opener, window function teach-able
- Resistant to dirt
- Small design
- Robust metal housing
- Protection class IP 67



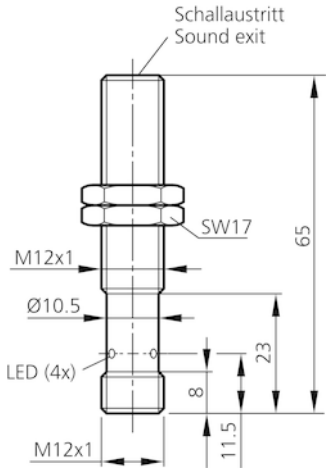

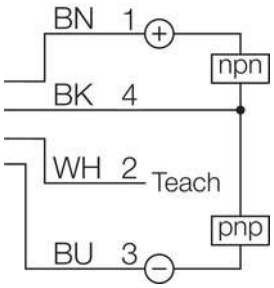

BK: black BN: brown BU: blue WH: white

Function

Technical data (typ.)	+20°C, 24 V DC
Service voltage	18 … 30 V DC
No-load current (max.)	40 mA (24 V DC)
Inverse polarity protection	Yes
Short-circuit protection	Yes
Insulation voltage endurance	500 V
Housing dimensions	M12 x 65 mm
Thread	M12 x 1
Housing length	65 mm
Transmission exit	axial
Assembly distance (sensor to sensor)	200 mm
Housing material	Brass (CuZn, nickel-plated)
Material	Epoxy resin, PUR (Transducer surface)
Weight	18 g
Protection class	III, operation on protective low voltage
Approvals	UL
Operating principle	Ultrasonic sensor, Ultrasonic barrier
Evaluation	digital (With IO-Link)
Design	Thread
Characteristics	IO-Link
Parallel operation possible	No

212883
US 12 M 400 G3-B4
Ultrasonic sensor

Technical data (typ.)	+20°C, 24 V DC
Scope of delivery	Sensor, 2 x M12 nuts
Functions	Teach (Pin 2), Out 1, IO-Link (Pin 4)
Switching output	Push-pull, 150 mA, NO/NC, switchable
Max. switch current	150 mA
Voltage drop (max.)	2 V
Interface	IO-Link (V1.1, COM2 38.4 kBd, Smart Sensor Profile)
Nominal switching distance (Sn)	400 mm
Range	40 … 400 mm
Adjustment range	40 … 400 mm (Teach in)
Resolution	1.0 mm
Standardized measuring plate	200 x 200 mm
Switching hysteresis (max.)	2 … 20 mm (Adjustable by IO-Link)
Reproducibility	< 1.5 mm
Sensitivity adjustment	Remote teach
Display	LED 1x Green - Status, 1x yellow - Switching output
Ultrasonic frequency	300 kHz
Switching frequency	10 Hz
Readiness delay (max.)	300 ms
Shock/vibration load	30 g, 11 ms / 10 … 55 Hz, 1.0 mm
Ambient temperature during operation	-25 … +70 °C
Temperature drift	0.2 %/K (uncompensated)
Temperature drift	< 1 %/Sn (compensated)
Protection type	IP 67
Connection	Connector, M12, 4-pin
Connection cable	VKHM … /4

More information / accessories	https://www.di-soric.com/212883

© di-soric . Right to change reserved