Mustang Toggle Switches waterproof

Specifications:

Contact rating:	250 V AC, 3 A / 125 V AC, 6 A 30 V DC, 4 A / 12 V DC, 5 A 6 V DC, 6 A
Contact resistance:	< 20 mΩ
Insulation resistance:	> 1000 MΩ at 500 V DC
Dielectric strength:	1500 V, 50 Hz for the duration of 1 minute
Operating temperature:	– 45° to + 140° C
Mechanical life:	minimum 100 000 operations
Contacts:	coin silver (common contact copper alloy, silver-plated) also available gold-plated version B and G (see page 4)
Terminals:	solder tags, copper alloy silver-plated
Water proofing:	IP 67
Sealing:	neoprene O-rings between toggle/bushing and bushing/panel
Material:	case: diallyle-phthalate, meets UL 94 V–0, green lever: chromium-plated, metal parts: nickel-plated
Mounting:	bushing 15/32-32 THD locking through flat bush, key 14 mm
Soldering conditions:	hand-soldering – max.: 60 W, 3 sec, 420° C auto-soldering – max.: 5 sec, 270° C

Models: Switching functions

S P D T	●		
MTW 106 D	on	–	on
MTW 106 E	on	off	on
MTW 106 F	mom	–	on
MTW 106 G	mom	off	mom
MTW 106 H	mom	off	on

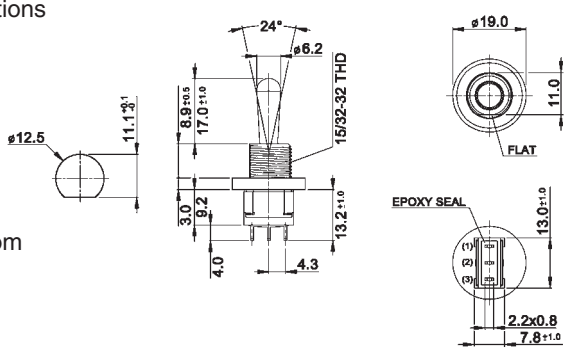



D P D T			
MTW 206 N	on	–	on
MTW 206 P	on	off	on
MTW 206 R	mom	–	on
MTW 206 S	mom	off	mom
MTW 206 T	mom	off	on
MTW 206 PA	on	on	on

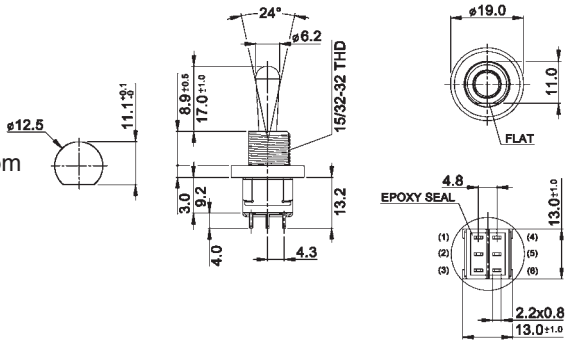



Accessories:

Waterproof sealing cap (height 11 mm)

grey	ET 507 Z

