F-Series

Single Pole Toggle Switches

General purpose workhorses with options tailored to meet most any need. Ratings to 20A 277VAC, various actuator, bushing, termination, and circuit choices allow this versatile switch to easily integrate into a variety of different applications. The F-Series has a storied history in the Marine, Food Service, Generator, Industrial Control, and Office Automation markets and is appropriate for usage in low voltage DC applications as well.

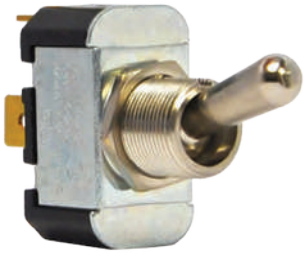



Carling Technologies®
Innovative Designs. Powerful Solutions.

Carling Technologies, Inc.
60 Johnson Avenue • Plainville, CT 06062-1177
Phone: (860) 793-9281 • Fax: (860) 793-9231
Email: sales@carlingtech.com • www.carlingtech.com

Dielectric Strength
1000V - live to dead metal parts

Mechanical Life
100,000 cycles

Electrical Life
50,000 cycles - maintained
25,000 cycles - momentary

Operating Temperature
0°F to 150°F (-17.8°C to +65.6°C)

2FA54 - 73 / TABS

1 Base Part Number | 2 Actuator Style | 3 Tab Terminals

1 BASE PART NUMBER: SERIES/CIRCUITRY/RATING/TERMINATION[1]
10A 250VAC; 15A 125VAC; 3/4 HP 125-250VAC

	Solder Lug	.250 Tab QC	Screw Terminals
On-None-Off	**2FA53**	**2FA53- . . . /TABS**	**2FA54**
(On)-None-Off	**6FA53**	**6FA53- . . . /TABS**	**6FA54**
On-None-(Off)	**6FA57**	**6FA57- . . . /TABS**	**6FA58**
On-None-On	**2FB53**	**2FB53- . . . /TABS**	**2FB54**
On-None-(On)	**6FB53**	**6FB53- . . . /TABS**	**6FB54**
On-Off-On	**2FC53**	**2FC53- . . . /TABS**	**2FC54**
On-Off-(On)	**6FC57**	**6FC57- . . . /TABS**	**6FC58**
(On-Off-(On)	**6FC53**	**6FC53- . . . /TABS**	**6FC54**

Additional ratings up to 20A 125VAC, 12A 250VAC, 1HP 120-240 VAC available. Consult factory for specifics.

2 ACTUATOR STYLE
BAT STYLE TOGGLE[2]

unsealed	sealed	toggle length	bushing length
73	**78**	0.687	0.465
E3	**E8**	2.000	0.465

3 TAB TERMINALS
/TABS Tab Terminals
(blank) Leave blank if tab terminals not required.

Notes:
1 Consult factory for .187 tab, wire lead and combination screw/tab/solder lug termination callouts.
2 Additional toggle options are available. Consult factory.
( ) indicates momentary function.

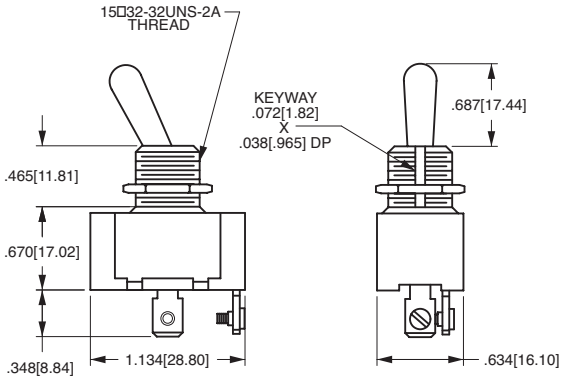

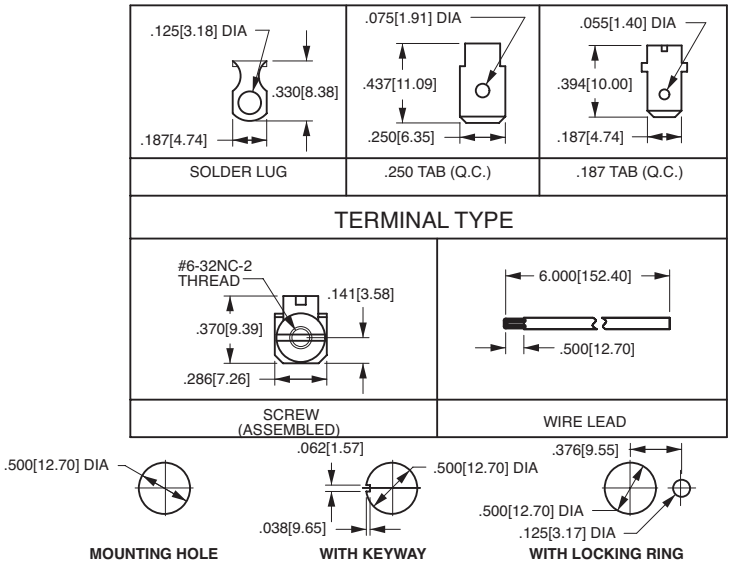

*Manufacturer reserves the right to change product specification without prior notice.

REV_SW_F_0912

60 Johnson Avenue • Plainville, CT 06062–1177 • Phone: (860) 793–9281 • Fax: (860) 793–9231
Email: sales@carlingtech.com • www.carlingtech.com