IEP201

Inductive sensor

IEK3003-FRKG/V4A/IO/AS

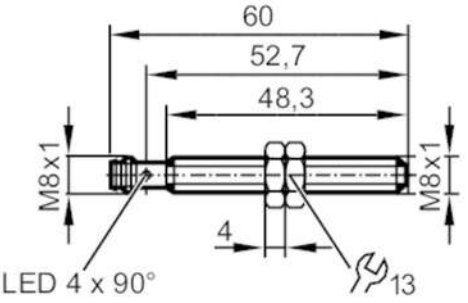

Product characteristics		
Electrical design		PNP/NPN; (parameterisable)
Output function		normally open / normally closed; (parameterisable)
Communication interface		IO-Link
Housing		threaded type
Dimensions	[mm]	M8 x 1 / L = 60
Application		
Special feature		Gold-plated contacts; Magnetic-field immune
Magnetic-field immune		yes
Max. magnetic field immunity	[mT]	300
Electrical data		
Operating voltage	[V]	10...30 DC
Current consumption	[mA]	< 20
Protection class		III
Reverse polarity protection		yes
Outputs		
Electrical design		PNP/NPN; (parameterisable)
Output function		normally open / normally closed; (parameterisable)
Max. voltage drop switching output DC	[V]	2.5
Permanent current rating of switching output DC	[mA]	100
Switching frequency DC	[Hz]	75
Short-circuit protection		yes
Overload protection		yes
Detection zone		
Switch point IO-Link	[mm]	0.05...2.91
Measuring range IO-Link	[mm]	0.05...3
Accuracy / deviations		
Repeatability		< 10 µm
Factory calibration (target: aluminium, 24x24 mm)		
Resolution	[µm]	5

IEP201

Inductive sensor

IEK3003-FRKG/V4A/IO/AS

Temperature drift		± 1,2 µm/K	
Linearity deviation		± 10 µm	
Application calibration (1-point calibration; target: steel, 24x24 mm)			
Resolution	[µm]	5	
Temperature drift		± 3 µm/K	
Linearity deviation		± 75 µm	
Application calibration (3-point calibration; target: steel, 16x16 mm)			
Resolution	[µm]	5	
Temperature drift		± 3 µm/K	
Linearity deviation		± 50 µm	
Interfaces			
Communication interface		IO-Link	
Transmission type		COM2 (38,4 kBaud)	
IO-Link revision		1.1	
SDCI standard		IEC 61131-9 CDV	
Profiles		Smart Sensor - SSP 4.1.1	Measuring and Switching Sensor, 1 channel
		Common - I&D	Identification and Diagnosis
		Extension	Object detection, switches when value falls below the setpoint
		Function	Locator
		Function	ProductURI
SIO mode		yes	
Required master port type		A	
Min. process cycle time	[ms]	3.2	
Supported DeviceIDs		**Type of operation**	**DeviceID**
		default	1816
Operating conditions			
Ambient temperature	[°C]	-25...70	
Protection		IP 65; IP 66; IP 67; IP 68; IP 69K	
Tests / approvals			
EMC		EN 61000-4-2 ESD	4 kV CD / 8 kV AD
		EN 61000-4-3 HF radiated	10 V/m
		EN 61000-4-4 Burst	2 kV
		EN 61000-4-6 HF conducted	10 V
		EN 55011	Class A
Vibration resistance		EN 60068-2-6 Fc	20 g (10...3000 Hz) / 50 sweep cycles, 1 octave per minute, in 3 axes
Shock resistance		EN 60068-2-27 Ea	100 g 11 ms half-sine; 3 shocks each in every direction of the 3 coordinate axes
Continuous shock resistance		EN 60068-2-27 Eb	40 g 6 ms; 4000 shocks each in every direction of the 3 coordinate axes
Fast temperature change		EN 60068-2-14 Na	TA = -25 °C; TB = 70 °C; t1 = 30 min; t2 = < 10 s; 50 cycles
MTTF	[years]	1347	
Embedded software included		yes	

IEP201

Inductive sensor

IEK3003-FRKG/V4A/IO/AS

UL approval		Ta	-25...70 °C
		Enclosure type	Type 1
		power supply	Limited Voltage/Current
		UL approval no.	A031
		File number UL	E174191

Mechanical data		
Weight	[g]	45.9
Housing		threaded type
Mounting		flush mountable
Dimensions	[mm]	M8 x 1 / L = 60
Thread designation		M8 x 1
Materials		housing: stainless steel (316L/1.4404); sensing face: LCP white; LED window: PPSU; lock nuts: stainless steel (316L/1.4404)
Tightening torque	[Nm]	7

Displays / operating elements		
Display	switching status	4 x LED, yellow
	SIO mode	
	output stage supplied with current	LED, yellow lights
	IO-Link mode	
	target in measuring range	LED, yellow lights

Accessories	
Items supplied	lock nuts: 2
Remarks	
Pack quantity	1 pcs.

Electrical connection - plug

Connector: 1 x M8; coding: A; Locking: snap-fit ; Contacts: gold-plated



IEP201

Inductive sensor

IEK3003-FRKG/V4A/IO/AS

Connection

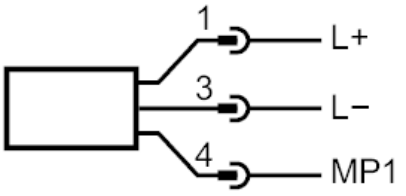

1	L+	
3	L-	
4	MP1	(NO / NC) / IO-Link

Diagrams and graphs

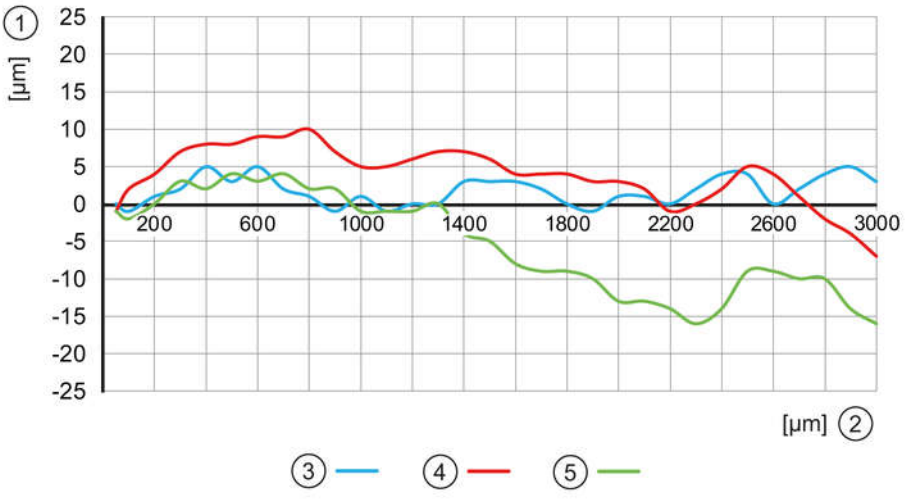

1 measured value [µm]

2 Linearity deviation [µm]

3 Factory calibration (target: aluminium, 24x24 mm)

4 application calibration (1-point calibration; target: steel, 24x24 mm)

5 application calibration (3-point calibration; target: steel, 16x16 mm)