

Model Number

OBT80-R2-E2

Background suppression sensor
with 2 m fixed cable

Features

- High-performance miniature photoelectric sensors
- 45° cable outlet for maximum mounting freedom under extremely tight space constraints
- Improvement in machine availability with abrasion-resistant, antistatic glass front
- Highly visible light spot, even on dark materials
- Precision object detection, almost irrespective of the color
- Extremely long detection range paves the way for new applications

Product information

The R2 series nano sensor has been developed for a broad range of applications. It offers excellent durability and is exceptionally easy to install. The housing is compact and, with its 45° cable outlet, can be installed in the smallest spaces. New functional principles and functionality open up a range of new options. The abrasion-resistant lens allows long operating times close to the moving object.

Dimensions

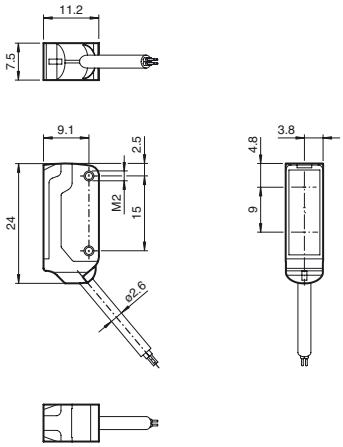

Electrical connection

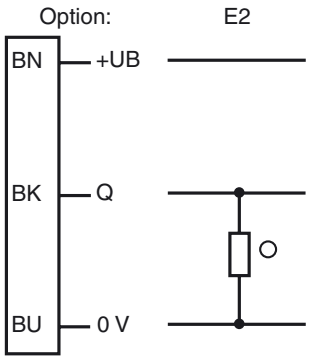

○ = Light on
● = Dark on

Indicators/operating means

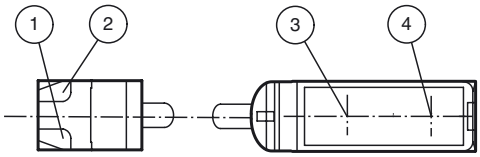

1	Operating display	green
2	Signal display	yellow
3	Emitter	
4	Receiver	

Release date: 2013-01-30 07:43 Date of issue: 2013-02-18 225924_eng.xml

Technical data

General specifications		
Detection range		10 ... 80 mm
Background suppression		starts from 120 mm
Reference target		standard white, 100 mm x 100 mm
Light source		LED
Light type		modulated visible red light , 630 nm
Black/White difference (6 %/90 %)		< 20 % at 80 mm
Angle deviation		approx. 2 °
Diameter of the light spot		approx. 5 mm at a distance of 80 mm
Angle of divergence		approx. 2 °
Optical face		frontal
Ambient light limit		EN 60947-5-2 : 30000 Lux
Functional safety related parameters		
$MTTF_d$		800 a
Mission Time (T_M)		20 a
Diagnostic Coverage (DC)		0 %
Indicators/operating means		
Operating display		LED green, statically lit Power on , short-circuit : LED green flashing (approx. 4 Hz)
Function display		LED yellow ON: lights when object is detected
Electrical specifications		
Operating voltage	U_B	10 ... 30 V DC , class 2
No-load supply current	I_0	< 10 mA
Output		
Switching type		NO contact
Signal output		1 PNP output, short-circuit protected, reverse polarity protected, open collector
Switching voltage		max. 30 V DC
Switching current		max. 50 mA , resistive load
Voltage drop	U_d	≤ 1.5 V DC
Switching frequency	f	approx. 800 Hz
Response time		600 µs
Ambient conditions		
Ambient temperature		-25 ... 60 °C (-13 ... 140 °F)
Storage temperature		-30 ... 70 °C (-22 ... 158 °F)
Mechanical specifications		
Protection degree		IP67
Connection		2 m fixed cable
Material		
Housing		PC/ABS and PBT
Optical face		glass
Cable		PUR
Installation		Fixing screws , 2 x M2 allen head screws included with delivery
Mass		approx. 20 g
Compliance with standards and directives		
Directive conformity		
EMC Directive 2004/108/EC		EN 60947-5-2:2007
Approvals and certificates		
UL approval		cULus Recognized, Class 2 Power Source
CCC approval		CCC approval / marking not required for products rated ≤36 V

Curves/Diagrams

Characteristic response curve

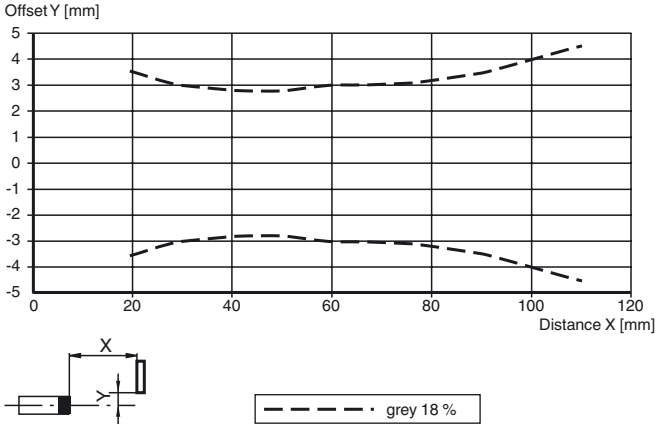

Accessories

MH-R2-01
Mounting bracket

MH-R2-02
Mounting bracket

MH-R2-03
Mounting bracket

MH-R2-04
Mounting bracket

Other suitable accessories can be found at www.pepperl-fuchs.com

Release date: 2013-01-30 07:43 Date of issue: 2013-02-18 225924_eng.xml

Subject to modifications without notice
Copyright Pepperl+Fuchs
Pepperl+Fuchs Group www.pepperl-fuchs.com
USA: +1 330 486 0001 fa-info@us.pepperl-fuchs.com
Germany: +49 621 776-4411 fa-info@pepperl-fuchs.com
Singapore: +65 6779 9091 fa-info@sg.pepperl-fuchs.com
PEPPERL+FUCHS SENSING YOUR NEEDS

Detection ranges

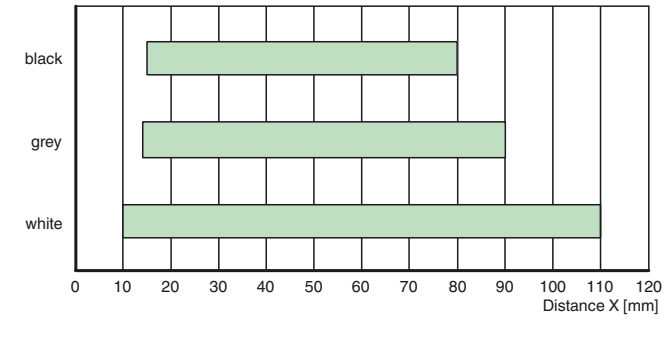

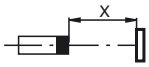

Release date: 2013-01-30 07:43 Date of issue: 2013-02-18 225924_eng.xml

Subject to modifications without notice
Copyright Pepperl+Fuchs

Pepperl+Fuchs Group
www.pepperl-fuchs.com
USA: +1 330 486 0001
fa-info@us.pepperl-fuchs.com
Germany: +49 621 776-4411
fa-info@pepperl-fuchs.com
Singapore: +65 6779 9091
fa-info@sg.pepperl-fuchs.com

PEPPERL+FUCHS
SENSING YOUR NEEDS