JUMO GmbH & Co. KG
Delivery address: Mackenrodtstraße 14
36039 Fulda, Germany
Postal address: 36035 Fulda, Germany
Phone: +49 661 6003-0
Fax: +49 661 6003-607
Email: mail@jumo.net
Internet: www.jumo.net

JUMO UK LTD
JUMO House
Temple Bank, Riverway
Harlow, Essex, CM20 2DY, UK
Phone: +44 1279 63 55 33
Fax: +44 1279 62 50 29
Email: sales@jumo.co.uk
Internet: www.jumo.co.uk

JUMO Process Control, Inc.
6724 Joy Road
East Syracuse, NY 13057, USA
Phone: +1 315 437 5866
Fax: +1 315 437 5860
Email: info.us@jumo.net
Internet: www.jumousa.com

JUMO tecLine HY pH/Rd

pH and redox combination electrodes, digital with reusable JUMO digiLine electronics or analog

Series 201022 – pH electrodes
Series 201027 – redox electrodes

Brief description

Premium materials and components make JUMO tecLine HY electrodes particularly suitable for the most demanding applications in process and industrial measurement technology. They are designed as combination electrodes (glass or metal electrodes and reference electrodes in one shaft). Depending on the model, a Pt1000 temperature probe can be optionally integrated.

Active pH component: JUMO tecLine HY electrodes are equipped with the proven JUMO HT glass (pH high temperature membrane glass) for continuous use up to 135 °C and a pH range from pH 0 to 14. This ensures fast and reliable measuring results.

Active redox component: a robust platinum or gold tip provides reliable measured values and enables easy sensor cleaning.

Reference system: a highly elastic, non-toxic special JUMO hydrogel with certified biocompatibility is used as a reference electrolyte. It offers robust and stable contact between the diaphragm and the conduction system. It withstands quick temperature changes, as they occur in sterilization processes, for example.

The electrodes are provided with a salt reserve as standard. This increases the service life, especially for measurements in low-ion media or at high flow rates.

The tried and tested JUMO cartridge-style conduction system is used as the reference system. This ensures that the electrolyte remains free of silver ions throughout the entire sensor operating life and is less prone to the effects of electrode toxins.

The JUMO tecLine HY pH and redox combination electrodes feature a high quality zirconium dioxide diaphragm with optimized features in terms of KCl throughput and inner electrolyte protection.

JUMO tecLine HY electrodes are state-of-the-art for modern pH and redox electrodes. Each top-quality electrode is individually tested and supplied with a calibration certificate. Modern production facilities ensure consistent characteristics.

All standard electrodes are manufactured using physiologically safe and FDA-listed materials. They feature lead-free shaft glass and therefore comply with the RoHS-2 directive.



Type 201022/10...

Special features

- With high-quality zirconium dioxide diaphragm
- SIP/CIP capability
- Certified biocompatibility according to EN ISO 10993-5
- Designed for use at a continually high process temperature of up to max. 135 °C (6 bar)
- Cartridge-style conduction system with reference electrolyte (gel) free of silver ions
- Pt1000 temperature probe can be integrated as an option
- With salt reserve to increase service life in media with low conductivity
- Redox versions with platinum or gold tip up to ±1500 mV
- Supplied with quality certificate

JUMO GmbH & Co. KG
Delivery address: Mackenrodtstraße 14
36039 Fulda, Germany
Postal address: 36035 Fulda, Germany
Phone: +49 661 6003-0
Fax: +49 661 6003-607
Email: mail@jumo.net
Internet: www.jumo.net

JUMO UK LTD
JUMO House
Temple Bank, Riverway
Harlow, Essex, CM20 2DY, UK
Phone: +44 1279 63 55 33
Fax: +44 1279 62 50 29
Email: sales@jumo.co.uk
Internet: www.jumo.co.uk

JUMO Process Control, Inc.
6724 Joy Road
East Syracuse, NY 13057, USA
Phone: +1 315 437 5866
Fax: +1 315 437 5860
Email: info.us@jumo.net
Internet: www.jumousa.com

Typical areas of application

- Processes with higher continuous temperatures up to maximum 135 °C and pressures up to maximum 6 bar
- Hygienic applications, sterilization and fermentation processes in the food and pharmaceutical industry
- Universal use in slightly and unpolluted aqueous media; drinking water, salt water and seawater applications

The advantages of electrodes with combined JUMO digiLine electronics

- Fail-safe digital data transfer for optimal process monitoring
- Modular system: for single measuring points and for establishing electrode networks
- Plug and Play function when connected to transmitters from the JUMO AQUIS touch series. This facilitates the replacement of electrodes or the brief exchange of electrodes for calibration purposes.
- Also suitable for use with the JUMO mTRON T automation system
- Version with 4 to 20 mA output for integration into existing systems
- digiLine electronics can continue to be used even when the electrode becomes worn
- Easy and secure configuration in the lab using USB interface and JUMO DSM tool (software)

Detailed information for designing a JUMO digiLine sensor network and all the necessary JUMO digiLine accessories are provided at **www.digiline.jumo.info** and in the system data sheet 203501.

JUMO GmbH & Co. KG
Delivery address: Mackenrodtstraße 14
36039 Fulda, Germany
Postal address: 36035 Fulda, Germany
Phone: +49 661 6003-0
Fax: +49 661 6003-607
Email: mail@jumo.net
Internet: www.jumo.net

JUMO UK LTD
JUMO House
Temple Bank, Riverway
Harlow, Essex, CM20 2DY, UK
Phone: +44 1279 63 55 33
Fax: +44 1279 62 50 29
Email: sales@jumo.co.uk
Internet: www.jumo.co.uk

JUMO Process Control, Inc.
6724 Joy Road
East Syracuse, NY 13057, USA
Phone: +1 315 437 5866
Fax: +1 315 437 5860
Email: info.us@jumo.net
Internet: www.jumousa.com

Technical data

Specifications

Measurands	pH value or redox potential Temperature (optional)
Measuring ranges	
pH-value	0 to 14 pH
Redox potential	±1500 mV
Temperature	0 to 135 °C

Environmental influences

Storage temperature	-5 to +30 °C
Protection type	IP66 and IP 67

Process conditions

Process temperature	0 to +135 °C
Process pressure	6 bar
Pressure-temperature diagram	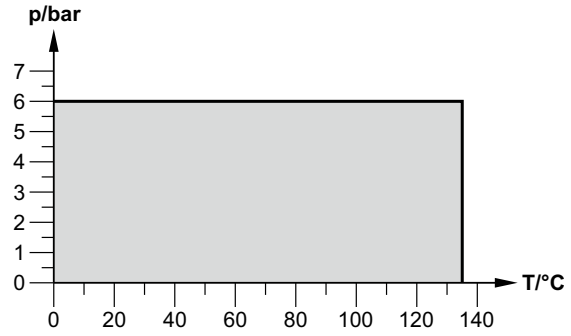
Recommended minimum conductivity of the measuring medium	50 µS/cm

Structure

Process connection	Pg13.5
Temperature sensor	Pt1000 (class A)
Plug heads	N screw head (S8), Pg13.5 thread Variopin (VP) plug head, Pg13.5 thread
Reference system	Silver/silver chloride (Ag/AgCl) cartridge-style conduction system, highly elastic gel (AgCl-free)
Diaphragm	Zirconium ceramic diaphragm
Glass membrane	Spherical
Membrane glass	High-temperature (HT) glass, suitable for high-alkaline
Materials	See illustrations in chapter "Dimensions", Page 5

JUMO GmbH & Co. KG
Delivery address: Mackenrodtstraße 14
36039 Fulda, Germany
Postal address: 36035 Fulda, Germany
Phone: +49 661 6003-0
Fax: +49 661 6003-607
Email: mail@jumo.net
Internet: www.jumo.net

JUMO UK LTD
JUMO House
Temple Bank, Riverway
Harlow, Essex, CM20 2DY, UK
Phone: +44 1279 63 55 33
Fax: +44 1279 62 50 29
Email: sales@jumo.co.uk
Internet: www.jumo.co.uk

JUMO Process Control, Inc.
6724 Joy Road
East Syracuse, NY 13057, USA
Phone: +1 315 437 5866
Fax: +1 315 437 5860
Email: info.us@jumo.net
Internet: www.jumousa.com

Special design features

Salt reserve

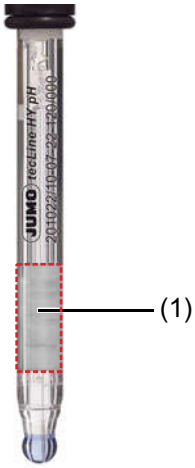

The electrode is equipped as standard with a salt reserve in the form of four salt rings (see illustration).

This makes it particularly well suited for use in low-ion media or at high flow rates.

The salt reserve helps to improve the service life of the electrode.

The rings are not a manufacturing defect (crystallization).

The "consumption status" of the electrode can be assessed by the reduction of the salt rings.

(1) Salt reserve

JUMO digiLine electronics



The JUMO digiLine electronics are delivered screwed firmly to the combination electrode. They can continue to be used even when the sensor becomes worn.

The factory calibration and further sensor data are stored in the head. Additional information is available in data sheet (TBL) 202705 and in the JUMO digiLine system data sheet 203501.

Extra code /960: JUMO digiLine interface, bus-compatible (the transmission of measured values, calibration and configuration are all digital).

Extra code /961: with analog 4 to 20 mA output for integration into an existing infrastructure (the transmission of measured values is analog, calibration and configuration are performed via a digital interface). With additional digital input (e.g. hold function).

(3) M12 plug connector
(4) Screw connection
(5) Combination electrode

JUMO GmbH & Co. KG
Delivery address: Mackenrodtstraße 14
36039 Fulda, Germany
Postal address: 36035 Fulda, Germany
Phone: +49 661 6003-0
Fax: +49 661 6003-607
Email: mail@jumo.net
Internet: www.jumo.net

JUMO UK LTD
JUMO House
Temple Bank, Riverway
Harlow, Essex, CM20 2DY, UK
Phone: +44 1279 63 55 33
Fax: +44 1279 62 50 29
Email: sales@jumo.co.uk
Internet: www.jumo.co.uk

JUMO Process Control, Inc.
6724 Joy Road
East Syracuse, NY 13057, USA
Phone: +1 315 437 5866
Fax: +1 315 437 5860
Email: info.us@jumo.net
Internet: www.jumousa.com

Dimensions

pH combination electrode type 201022/10...

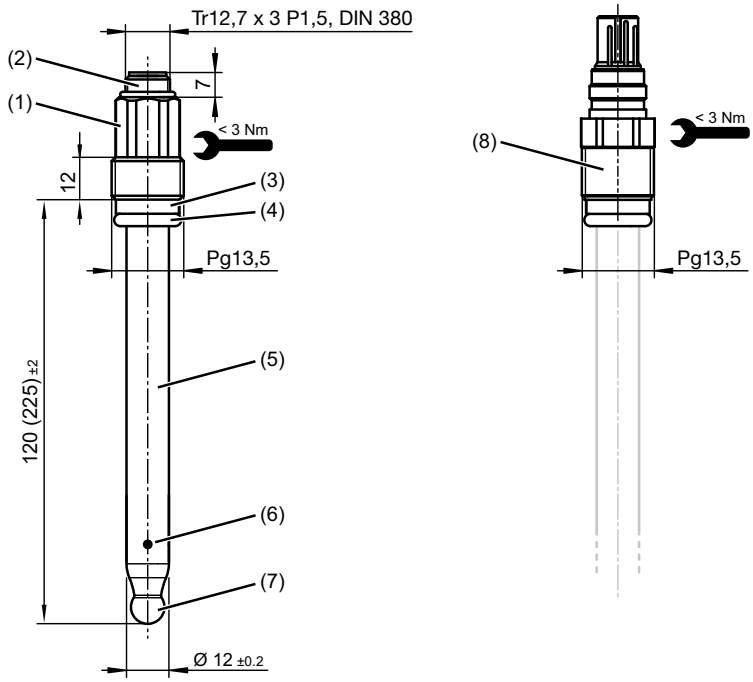

(1) N screw head (S8) Pg13.5 (PPS), max. tightening torque 3 Nm
(2) Thread Tr12.7 × 3 P1.5
(3) Ring (PEEK)
(4) O-ring 10 × 3.5 (FPM70)
(5) Electrode shaft (glass DIN 19263)
(6) Zirconium ceramic diaphragm
(7) Spherical membrane
(8) Variopin (VP) plug head connection with rotary union nut Pg13.5 (PBT), max. tightening torque 3 Nm

Redox combination electrode type 201027/10...

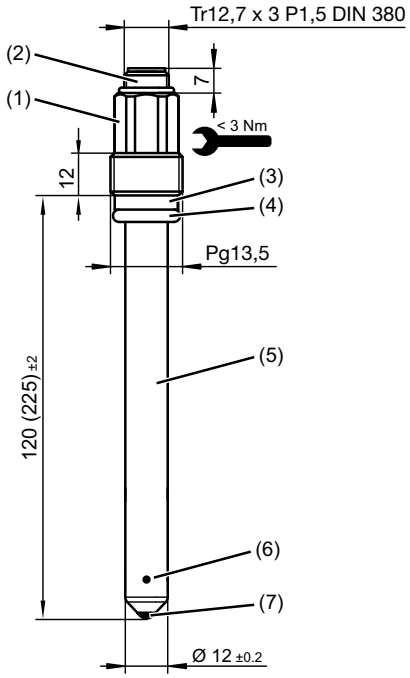

(1) N screw head (S8) Pg13.5 (PPS), max. tightening torque 3 Nm
(2) Thread Tr12.7 × 3 P1.5
(3) Ring (PEEK)
(4) O-ring 10 × 3.5 (FPM70)
(5) Electrode shaft (glass DIN 19263)
(6) Zirconium ceramic diaphragm
(7) Platinum or gold tip

JUMO GmbH & Co. KG
Delivery address: Mackenrodtstraße 14
36039 Fulda, Germany
Postal address: 36035 Fulda, Germany
Phone: +49 661 6003-0
Fax: +49 661 6003-607
Email: mail@jumo.net
Internet: www.jumo.net

JUMO UK LTD
JUMO House
Temple Bank, Riverway
Harlow, Essex, CM20 2DY, UK
Phone: +44 1279 63 55 33
Fax: +44 1279 62 50 29
Email: sales@jumo.co.uk
Internet: www.jumo.co.uk

JUMO Process Control, Inc.
6724 Joy Road
East Syracuse, NY 13057, USA
Phone: +1 315 437 5866
Fax: +1 315 437 5860
Email: info.us@jumo.net
Internet: www.jumousa.com

Combination electrode with reusable JUMO digiLine electronics

JUMO digiLine electronics
with N connection

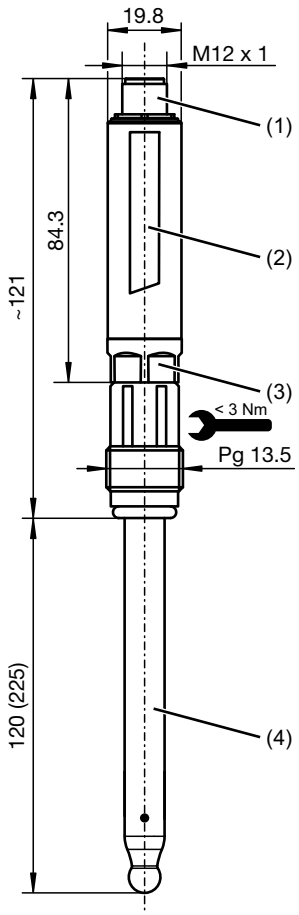

JUMO digiLine electronics
with Variopin connection

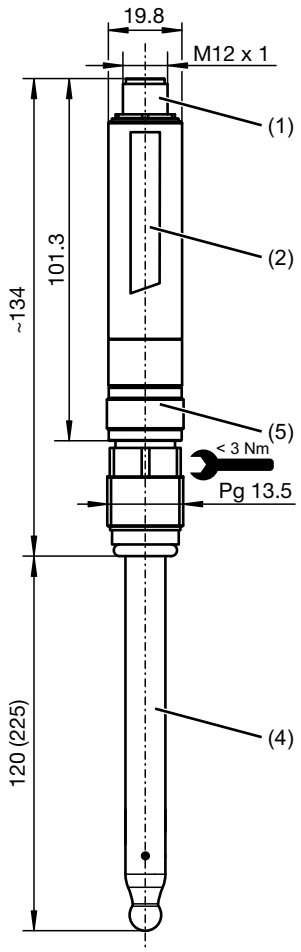

(1) M12 plug connector, 5 or 8-pole (see order details)

(2) JUMO digiLine electronics

(3) N connection (S8 screw head) of the JUMO digiLine electronics

(4) pH or redox electrode with N connection

(5) Variopin connection[a] (plug head) for JUMO digiLine electronics

[a] Only for type 201022/...

JUMO GmbH & Co. KG
Delivery address: Mackenrodtstraße 14
36039 Fulda, Germany
Postal address: 36035 Fulda, Germany
Phone: +49 661 6003-0
Fax: +49 661 6003-607
Email: mail@jumo.net
Internet: www.jumo.net

JUMO UK LTD
JUMO House
Temple Bank, Riverway
Harlow, Essex, CM20 2DY, UK
Phone: +44 1279 63 55 33
Fax: +44 1279 62 50 29
Email: sales@jumo.co.uk
Internet: www.jumo.co.uk

JUMO Process Control, Inc.
6724 Joy Road
East Syracuse, NY 13057, USA
Phone: +1 315 437 5866
Fax: +1 315 437 5860
Email: info.us@jumo.net
Internet: www.jumousa.com

Order details type 201022

	(1)	**Basic type**
201022/10		JUMO tecLine HY pH — pH combination electrode in glass shaft version, solid gel, salt reserve
	(2)	**Active pH component**
12		HT glass
	(3)	**Diaphragm**
07		Zirconium dioxide
	(4)	**Electrical connection**
18		Variopin (VP) plug head Pg13.5
82		N screw head (S8) Pg13.5, material PPS
	(5)	**Insertion length**
120		120 mm (standard)
225		225 mm
	(6)	**Extra code**
000		None
841		Integrated Pt1000
960		With JUMO digiLine electronics, 5-pin M12 plug connector (digital interface output)
961		With JUMO digiLine electronics, 8-pin M12 plug connector (output 4 to 20 mA and digital programming interface)

	(1)		(2)		(3)		(4)		(5)		(6)
Order code		-		-		-		-		/	
Order example	201022/10	-	12	-	07	-	82	-	120	/	000

Important information:

The order code is not modular. When placing orders, if possible please select the items listed under **"Stock versions"** or **"Production versions"**.
We must check the technical feasibility of and approve freely chosen combinations of individual code parts.

JUMO GmbH & Co. KG
Delivery address: Mackenrodtstraße 14
36039 Fulda, Germany
Postal address: 36035 Fulda, Germany
Phone: +49 661 6003-0
Fax: +49 661 6003-607
Email: mail@jumo.net
Internet: www.jumo.net

JUMO UK LTD
JUMO House
Temple Bank, Riverway
Harlow, Essex, CM20 2DY, UK
Phone: +44 1279 63 55 33
Fax: +44 1279 62 50 29
Email: sales@jumo.co.uk
Internet: www.jumo.co.uk

JUMO Process Control, Inc.
6724 Joy Road
East Syracuse, NY 13057, USA
Phone: +1 315 437 5866
Fax: +1 315 437 5860
Email: info.us@jumo.net
Internet: www.jumousa.com

Order details type 201027

	(1)	**Basic type**
201027/10		JUMO tecLINE HY Rd — Rd combination electrode in glass shaft version, solid gel, salt reserve
	(2)	**Active pH component**
22		Pt (platinum) tip
32		Au (gold) tip
	(3)	**Diaphragm**
07		Zirconium dioxide
	(4)	**Electrical connection**
82		N screw head (S8) Pg13.5, material PPS
	(5)	**Insertion length**
120		120 mm (standard)
225		225 mm
	(6)	**Extra code**
000		None
960		With JUMO digiLine electronics, 5-pin M12 plug connector (digital interface output)

	(1)		**(2)**		**(3)**		**(4)**		**(5)**		**(6)**
Order code		-		-		-		-		/	
Order example	201027/10	-	22	-	07	-	82	-	120	/	000

Important information:

The order code is not modular. When placing orders, if possible please select the items listed under **"Stock versions"** or **"Production versions"**.
We must check the technical feasibility of and approve freely chosen combinations of individual code parts.

JUMO GmbH & Co. KG
Delivery address: Mackenrodtstraße 14
36039 Fulda, Germany
Postal address: 36035 Fulda, Germany
Phone: +49 661 6003-0
Fax: +49 661 6003-607
Email: mail@jumo.net
Internet: www.jumo.net

JUMO UK LTD
JUMO House
Temple Bank, Riverway
Harlow, Essex, CM20 2DY, UK
Phone: +44 1279 63 55 33
Fax: +44 1279 62 50 29
Email: sales@jumo.co.uk
Internet: www.jumo.co.uk

JUMO Process Control, Inc.
6724 Joy Road
East Syracuse, NY 13057, USA
Phone: +1 315 437 5866
Fax: +1 315 437 5860
Email: info.us@jumo.net
Internet: www.jumousa.com

Scope of delivery

1 electrode in the ordered version
1 quality certificate for the electrode
1 operating manual 202900.0 for electrodes

For extra codes /960 and /961 (JUMO digiLine electronics) also:

Combination electrode screwed firmly, sealed and pre-calibrated to the JUMO digiLine electronics
1 calibration certificate for JUMO digiLine electronics
1 JUMO digiLine installation instructions

Stock versions

(Delivery within 3 working days after receipt of order)

Type	**Part no.**
201022/10-12-07-82-120/000 (HT glass, zirconium dioxide diaphragm, N screw head, 120 mm)	00659493
201022/10-12-07-18-120/841 (HT glass, zirconium dioxide diaphragm, Variopin plug head, 120 mm, Pt1000)	00659497
201027/10-22-07-82-120/000 (platinum tip, zirconium dioxide diaphragm, N screw head, 120 mm)	00659509

Accessories

Cables

Item	**Part no.**
Cable for sensors with N screw head (S8) Pg13.5: 202990/02-92-x-13 Cable for sensors with VarioPin (VP) plug head: 202990/11-95-x-11	See data sheet 202990

Solutions

Item	**Part no.**
pH buffer solutions Redox reference solution Electrode cleanser	See data sheet 202950

JUMO digiLine electronics (for retrofitting a combination electrode with digiLine functionality or as a replacement)

Item	**Part no.**
202705/10-90-530/000 (pH, VarioPin plug head, digital interface output)	00652273
202705/10-90-888/000 (pH, VarioPin plug head, 4 to 20 mA output)	00652277
202705/10-86-530/000 (pH, N screw head, digital interface output)	00652283
202705/10-86-888/000 (pH, N screw head, 4 to 20 mA output)	00652284
202705/20-90-530/000 (redox, VarioPin plug head, digital interface output)	00652285
202705/20-90-888/000 (redox, VarioPin plug head, 4 to 20 mA output)	00652286

more JUMO digiLine system components

Item	**Part no.**
JUMO DSM software (digital sensor management), base version (measuring, sensor information, configuration, calibration), for free download from the internet (product page JUMO tecLine HD ⇨Software)	
JUMO DSM software (digital sensor management), activation of the „data management“ module	00655587
USB-RS485 converter, DC coupling, M12	00746250
JUMO digiLine system data sheet 203501	