D12 Series DIN Rail High Power Fiber Optic Sensors

Powerful self-contained sensors for use with glass or plastic fiber optic assemblies

BANNER® the photoelectric specialist

- **Fiber optic sensors for DIN rail mounting; cabled or QD**
- **Fast response: 500µs standard, 50µs for Y & Y1 models**
- **Visible red light source; models for use with either Banner glass or plastic fiber optic assemblies**
- **Choice of either NPN (sinking) or PNP (sourcing) complementary outputs; 150 mA max. (continuous) load**
- **Normally closed output of most models may be wired as a diagnostic alarm output (depending upon hookup to power)**
- **Sensors operate from 10-30V dc.**
- **LED indicators for POWER ON and N.O. OUTPUT CONDUCTING**
- **7-segment LED bargraph indicates received signal strength, OUTPUT OVERLOAD, and MARGINAL EXCESS GAIN**

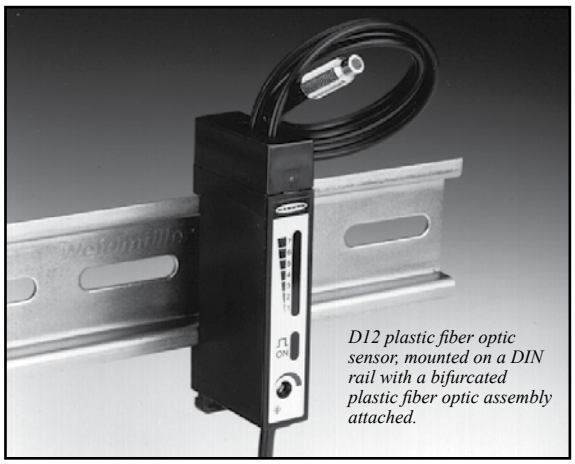

D12 plastic fiber optic sensor, mounted on a DIN rail with a bifurcated plastic fiber optic assembly attached.

D12s are compact, totally self-contained visible-red fiber optic sensors for DIN rail mounting. D12 sensors are designed for use with Banner glass and cut-to-length plastic fiber optics. Standard D12**FP** and D12**FV** plastic and glass fiber optic sensors offer fast 0.5 millisecond (500 µs) response. D12**FVY** Series (page 3) and D12**FPY** Series (page 4) sensors have switch-selectable 50µs/500µs response modes for applications that require a faster, high speed response time (50 µs as compared to the 500 µs of FP and FV models). D12**FVY1** and D12**FPY1** models have switch-selectable response times along with a built-in 20 millisecond pulse stretcher for use with loads (or input circuits) that are too slow to react to quick sensing events when using the 50µs response mode.

All models operate from 10-30V dc. D12s are available with a choice of NPN or PNP complementary outputs (one output normally open, one output normally closed). The normally closed output of FP and FV models (only) may be used as a diagnostic alarm output, depending upon the hookup of the sensor to the power supply. All models are available with either an attached cable or a 6" pigtail with a pico-type quick disconnect connector. There is one D12 model line for glass fibers, and another for plastic fibers. Model listings are given on pages 3 and 4.

Plastic fiber models may be used with either the small diameter (.010" and .020") or large diameter (.040") Banner cut-to-length plastic fibers.

Two top-mounted LED indicators (see drawing, right) light to indicate POWER ON and NORMALLY OPEN OUTPUT CONDUCTING conditions.

On all D12 sensors operating in the 500µs (standard) response mode, a red seven-segment moving-dot LED bargraph (below) lights to indicate the relative strength of the received light signal. This feature can greatly simplify sensitivity adjustment and the task of fiber optic alignment, as well as provide a constant reference over time for overall sensing system performance. In all models and in both response modes, segment #1 of the bargraph flashes to indicate an output overload. On all sensors operating in the 500µs response mode, segment #7 flashes to indicate marginal excess gain. On standard (FP and FY) models, a flashing LED corresponds to the "on" state of the D12's alarm output.

D12s have a 15-turn SENSITIVITY control, with a slotted brass screw clutched at both ends of travel.

D12s are constructed of rugged black ABS (Cycolac® KJB). The transparent housing cover is acrylic. All D12 sensors are rated NEMA 2.

WARNING These photoelectric presence sensors do NOT include the self-checking redundant circuitry necessary to allow their use in personnel safety applications. A sensor failure or malfunction can result in *either* an energized or a de-energized sensor output condition.

Never use these products as sensing devices for personnel protection. Their use as a safety device may create an unsafe condition which could lead to serious injury or death.

Only MINI-SCREEN®, MULTI-SCREEN®, MICRO-SCREEN™, MACHINE-GUARD™ and PERIMETER-GUARD™ Systems, and other systems so designated, are designed to meet OSHA and ANSI machine safety standards for point-of-operation guarding devices. No other Banner sensors or controls are designed to meet these standards, and they must NOT be used as sensing devices for personnel protection.

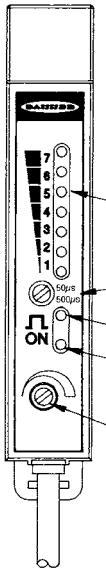

D12 Features
(top panel shown)

Moving dot signal strength and diagnostic display

Response mode selector (50µs or 500µs response)

Output indicator

Power "ON" indicator

15-turn sensitivity (Gain) control

*FPY, FPY1, FVY, and FVY1 models only. FP and FV models operate in 500µs mode only.

D12 Series DIN Rail Fiber Optic Sensors

Specifications, D12 Series sensors

Sensing range: see individual excess gain curves, pages 3 and 4.

Sensing beam: visible red, 680 nanometers.

Supply voltage: 10 to 30V dc at 45 mA max, exclusive of load. Protected against reverse polarity and inductive load transients.

Output configurations:
Solid-state dc complementary outputs:

For glass fiber optics *(see page 3 for models)*
D12SN6FV Series NPN sinking (standard)
D12SN6FVY Series NPN sinking (high speed)
D12SN6FVY1 Series NPN sinking (high speed, with pulse stretcher)

D12SP6FV Series PNP sourcing (standard)
D12SP6FVY Series PNP sourcing (high speed)
D12SP6FVY1 Series PNP sourcing (high speed, with pulse stretcher)

For plastic fiber optics *(see page 4 for models)*
D12SN6FP Series NPN sinking (standard)
D12SN6FPY Series NPN sinking (high speed)
D12SN6FPY1 Series NPN sinking (high speed, with pulse stretcher)

D12SP6FP Series PNP sourcing (standard)
D12SP6FPY Series PNP sourcing (high speed)
D12SP6FPY1 Series PNP sourcing (high speed, with pulse stretcher)

The N.C. (normally closed) output of standard FP and FV models may be used as an alarm output, depending upon the hookup to the power supply.

Output rating: Complementary outputs, one normally open (N.O.) and the other normally closed (N.C.). 150 mA maximum each output. No false pulse on power-up. (False pulse protection circuit causes a 0.1 second delay on power-up.) Short-circuit protected.
Off-state leakage current <10 microamps at 30V dc.
On-state saturation voltage <1V at 10 mA dc; <1.5V at 150 mA dc.
The* total load *may not exceed 150 mA.

Response time (FV, FP models): .
500 microseconds "on"; 500 microseconds "off".
Repeatability is 130 microseconds.

FVY, FVY1, FPY, and FPY1 models have switch-selectable standard 500 microsecond response mode plus a high speed (50 microseconds on/off) mode. Repeatability in the high-speed (50µs) mode is 15 microseconds. FPY1 and FVY1 models (when used in the 50µs response mode) include a 20 ms pulse stretcher for use in applications in which the load (or input circuit) requires a longer input signal.
Response time and repeatability are independent of signal strength.

Indicators: Two top-mounted LED indicators, one yellow and one green, and one seven segment red LED moving-dot bargraph. Note that the seven segment bargraph and marginal excess gain indication (bargraph segment #7) are inoperative in the 50µs response mode on Y and Y1 models.

GREEN LED lights for DC POWER ON.

YELLOW LED lights for NORMALLY OPEN OUTPUT CONDUCTING.

On all models in 500µs response mode, the 7-segment moving dot red LED bargraph lights to indicate relative received light signal strength. On all models in 50 and 500µs response modes, segment #1 flashes to indicate OUTPUT OVERLOAD. On all models in the 500µs response mode, segment #7 flashes to indicate MARGINAL EXCESS GAIN. On standard FV and FP models, a flashing LED corresponds to the "on" state of the alarm output. (Alarm output not available on Ys & Y1s.)

Adjustments: All models have a SENSITIVITY control on top of module (15-turn slotted brass screw, clutched at both ends of adjustment). FVY and FPY (high speed models) also have a top-mounted response mode selector switch.

Construction: Black ABS (Cycolac® KJB) housing with acrylic cover. Rated NEMA 2; IEC IP11. The fiber clamping element is Delrin®. Stainless steel M3 x 0,5 hardware for use with mounting bracket (supplied).

Cable: 6-1/2-foot (2 m) or 30-foot (9 m) attached PVC-covered cable, or 6-inch pigtail with pico-type 4-pin QD connector.

Mounting bracket: D12 Series sensors mount directly to a standard DIN rail, or may be through-hole mounted using the supplied mounting bracket and M3 x 0,5 hardware. Bracket material is black VALOX®.

Operating temperature range: -20° to +70°C (-5° to +158°F).
Maximum relative humidity 90% at 50°C (non-condensing).

Application caution...

D12 Series sensors are designed to deliver very high optical energy (excess gain). They should **not** be used for applications which offer low optical contrast (i.e. only a small difference in received light levels between the light and dark sensing conditions). Examples include diffuse mode sensing of objects in front of a reflective background and opposed mode sensing of non-opaque materials.

D12 sensors excel in applications requiring high excess gain (e.g. for long-range sensing, sensing with long fiber lengths, diffuse sensing of materials with low reflectivity, etc.)

Hookup Diagrams, D12 Series Sensor

Sinking (NPN)
Standard Hookup

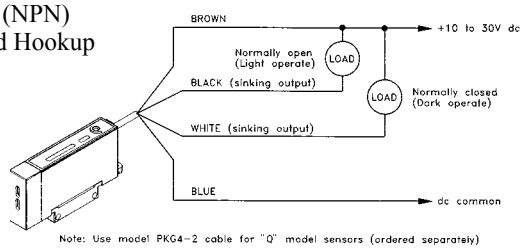

Note: Use model PKG4-2 cable for "Q" model sensors (ordered separately)

Sinking (NPN)
Alarm Hookup

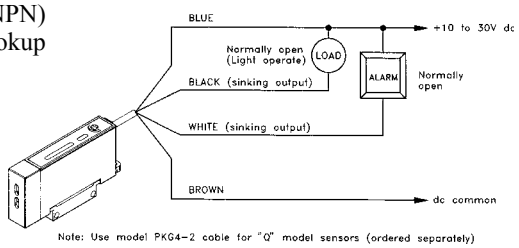

Note: Use model PKG4-2 cable for "Q" model sensors (ordered separately)

Sourcing (PNP)
Standard Hookup

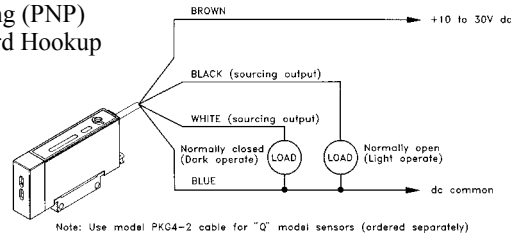

Note: Use model PKG4-2 cable for "Q" model sensors (ordered separately)

Sourcing (PNP)
Alarm Hookup

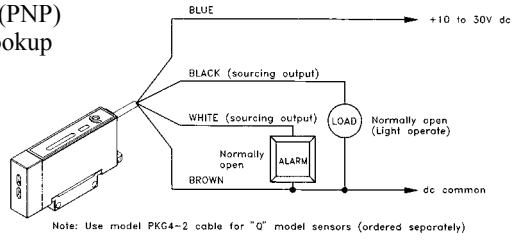

Note: Use model PKG4-2 cable for "Q" model sensors (ordered separately)

D12 Series DIN RAIL Glass Fiber Optic Sensors

Range and gain information for D12FV, D12FVY, and D12FVY1 Series glass fiber optic sensors

D12SN6FV(Q)*	NPN sinking complementary outputs (standard 500µs response time)
D12SN6FVY(Q)*	NPN sinking complementary outputs (with selectable 50µs high speed response mode)
D12SN6FVY1(Q)*	NPN sinking complementary outputs (with selectable 50µs high speed response mode and 20 ms pulse stretcher)
D12SP6FV(Q)*	PNP sourcing complementary outputs (standard 500µs response time)
D12SP6FVY(Q)*	PNP sourcing complementary outputs (with selectable 50µs high speed response mode)
D12SP6FVY1(Q)*	PNP sourcing complementary outputs (with selectable 50µs high speed response mode and 20 ms pulse stretcher)

The excess gain curves for glass fibers in the diffuse sensing mode is given at the immediate right. Fiber size is noted on the curve.

The excess gain curves for glass fibers in the opposed mode are given at the far right. Fiber size is noted on the curve.

* Include "Q" in model suffix to specify 6-inch pigtail with 4-pin pico-style QD. Omit "Q" to specify models with 6-foot attached cable.
Models with 30-foot attached cable are available.

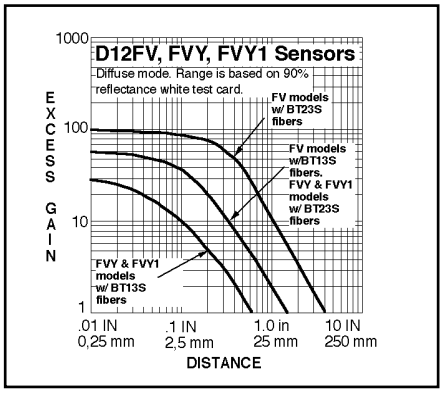

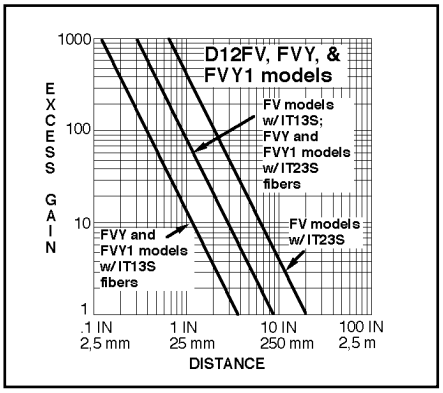

D12 Dimensions and Features

(glass fiber optic models)

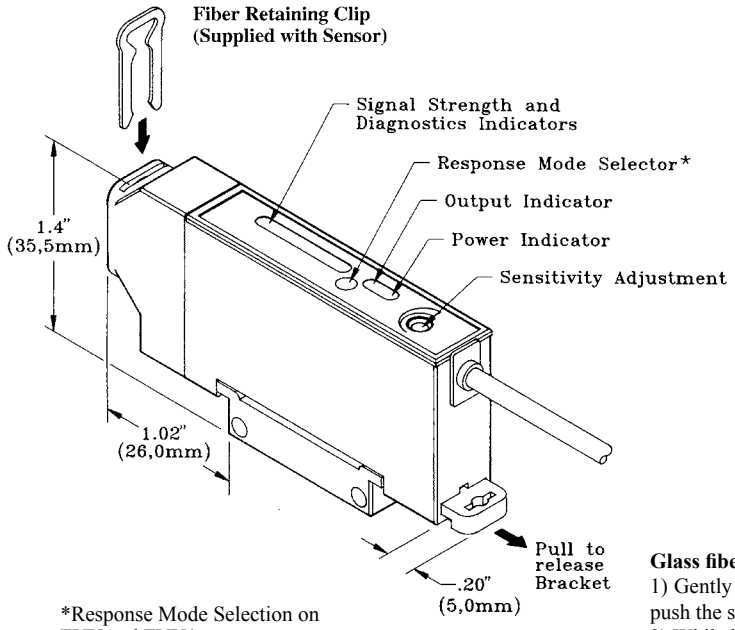

*Response Mode Selection on FVY and FVY1 models only

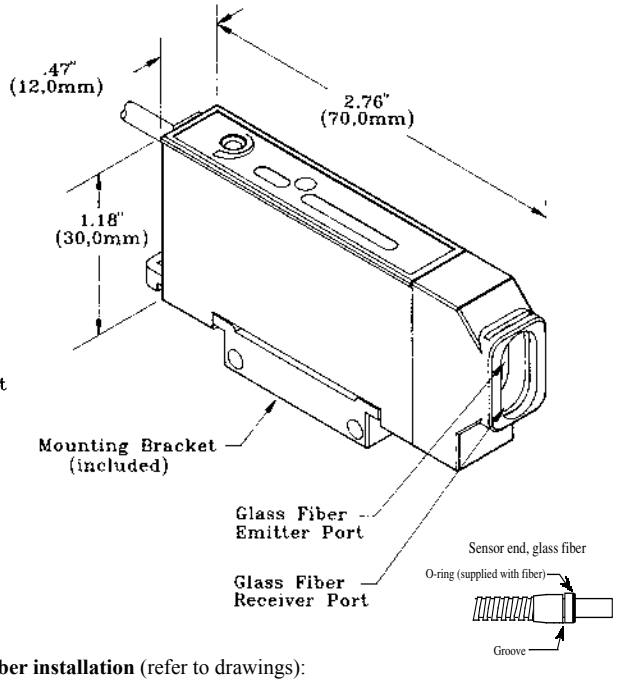

Glass fiber installation (refer to drawings):
1) Gently seat an o-ring onto each sensor end of the fiber (above), and push the sensor ends into the D12's fiber ports as far as they will go.
2) While holding the sensor ends snugly in place, slip the fiber retaining clip into the slot, and press the clip in until it snaps into the groove.

D12 Bracket Dimensions

For through-hole mounting of all D12 models; stainless steel hardware included.

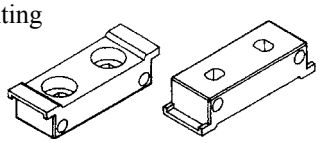

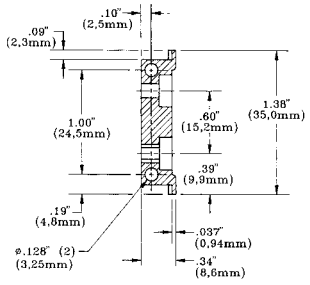

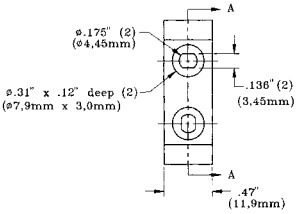

D12 Series DIN RAIL Plastic Fiber Optic Sensors

Range and gain information for D12FP, D12FPY, & D12FPY1 Series plastic fiber optic sensors

D12SN6FP(Q)*	NPN sinking complementary outputs (standard 500µs response time)
D12SN6FPY(Q)*	NPN sinking complementary outputs (with selectable 50µs high speed response mode)
D12SN6FPY1(Q)*	NPN sinking complementary outputs (with selectable 50µs high speed response mode and 20 ms pulse stretcher)
D12SP6FP(Q)*	PNP sourcing complementary outputs (standard 500µs response time)
D12SP6FPY(Q)*	PNP sourcing complementary outputs (with selectable 50µs high speed response mode)
D12SP6FPY1(Q)*	PNP sourcing complementary outputs (with selectable 50µs high speed response mode and 20 ms pulse stretcher)

* Include "Q" in model suffix to specify 6-inch pigtail with 4-pin pico-style QD.
Omit "Q" to specify models with 6-foot attached cable.
Models with 30-foot attached cable are available.

Excess gain curves for plastic fibers in the diffuse sensing mode are given to the right (top row). Fiber sizes are noted on the curves.

Excess gain curves for plastic fibers in the opposed mode are given below (bottom row). Fiber sizes are noted on the curves. The curve at the far lower right uses model L2 lenses for extended sensing range.

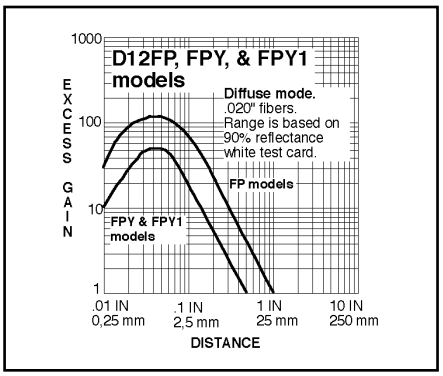

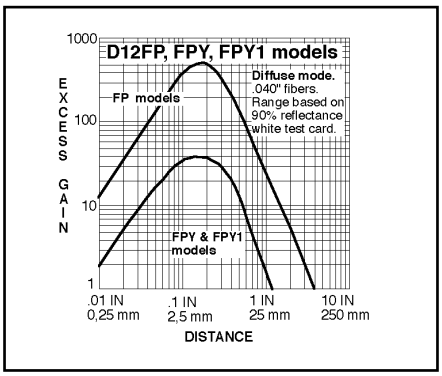

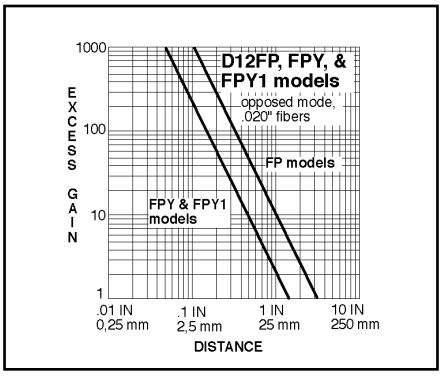

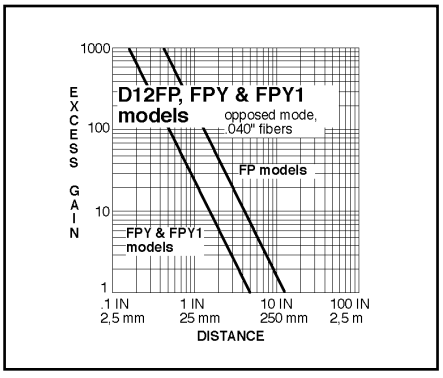

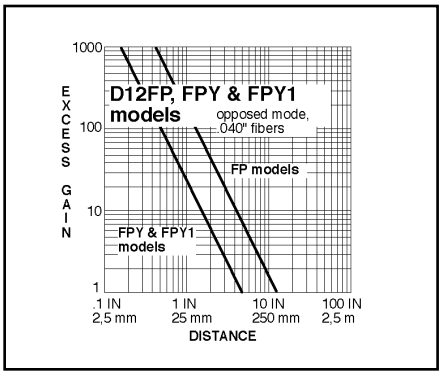

D12 Dimensions and Features (plastic fiber optic models)

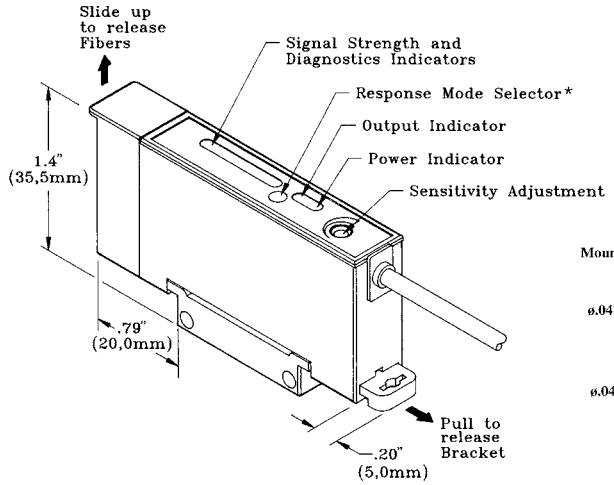

*Response Mode Selection on FPY and FPY1 models only

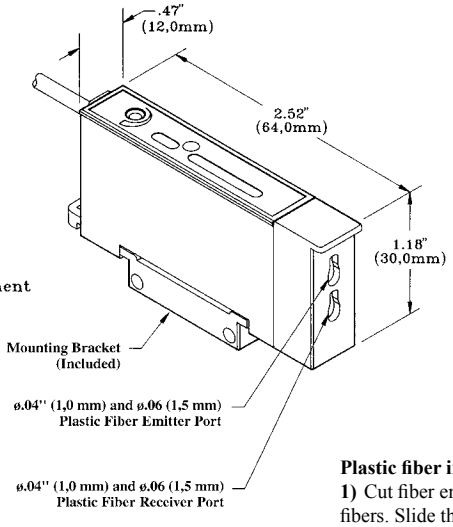

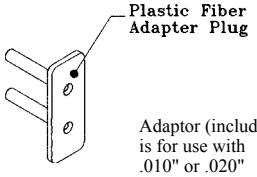

Adaptor (included) is for use with .010" or .020" diameter fibers.

Plastic fiber installation:
1) Cut fiber ends per instructions included with the fibers. Slide the fiber gripper up (open). *If .010" or .020" dia. fibers are used*, insert the adaptor (drawing above) into the ports as far as it will go.
2) All fibers: Insert the prepared plastic fiber sensor ends gently into the ports as far as they will go. Slide the fiber gripper back down to lock.

Banner Engineering Corp. 9714 Tenth Avenue No., Minneapolis, MN 55441 Telephone (763) 544-3164 FAX (763) 544-3213