Brand of NTN corporation

Technical data

UKFCE211H

Bearing units



Grey cast housing, radial insert ball bearing with adapter sleeve,seal with slinger

KIT CONTENT

UK211G2H, FCE211

VISUAL (S)

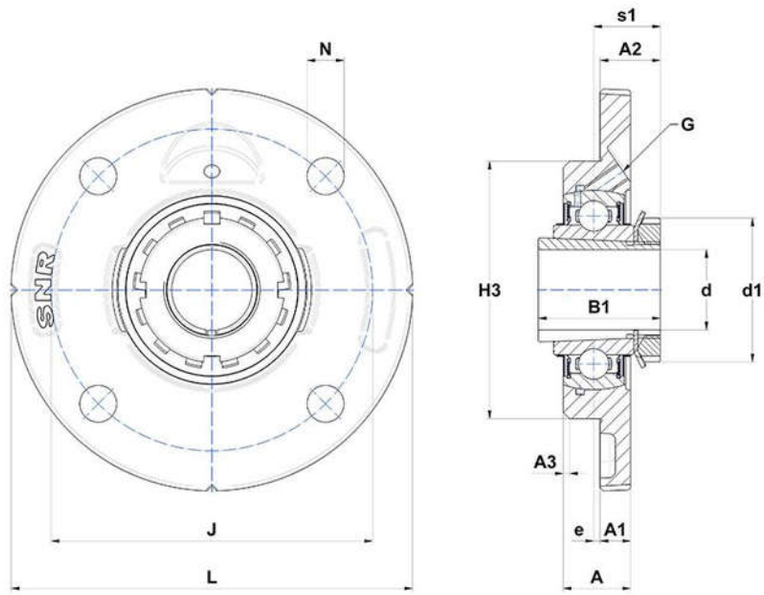

PRODUCT DEFINITION

Brand	SNR
A - Housing height	27,5 mm
A1 - Housing foot height / flange height	15 mm
A2 - Total height from mounting surface	29 mm
A3 - Centering depth / chamfer dimension	3 mm
B - Width of Inner Ring	33 mm

NTN Europe
1 rue des Usines · BP 2017 · 74010 Annecy Cedex · France · Tel. +33 (0)4 50 65 30 00
S.A. au capital de 322 639 919 € · RCS ANNECY B 325 821 072 · Id. Fiscale : FR 48 325 821 072
SIRET 325 821 072 00015 · Code APE 2815 Z · Code NACE 28.15

UKFCE211H
Bearing units

PRODUCT DEFINITION	
B1 - Overall width Inner Ring	59 mm
d - Shaft diameter	50 mm
d1 - Outer dia of eccent. Lock. collar / nut of adapter sleeve	75 mm
G - Grease fitting	M6x1
H3 - Centering dia	125 mm
J - Mounting holes distance	150 mm
L - Housing width / diameter	185 mm
N - Mounting hole dimension	18 mm
s1 - Distance nut to middle of bearing raceway	29 mm

PRODUCT PERFORMANCE	
C - Dynamic load rating	43550000 mN
C0 - Static load rating	29200000 mN
Operating temperature min.	253,15 °K
Operating temperature max.	373,15 °K

OTHER FEATURES	
Mass	3,22 kg
Adapter sleeve designation	H2311