L-GAGE® LT3 Long-Range Time-of-Flight Laser Sensor

Datasheet

Self-Contained Class 2 Laser Distance Sensor with Analog and Discrete Outputs



- Extremely long range: 5 m with white targets or 3 m with gray targets
- Banner's unique scalable analog output automatically distributes the output signal over the width of the programmed sensing window
- Analog and discrete (switched) outputs in each sensor, with independent window limits[1]
- Discrete output can be used for precise background suppression
- Choose NPN or PNP discrete output, plus 0 to 10 V dc or 4 to 20 mA sourcing analog output
- Fast, easy-to-use integrated push button TEACH-mode programming; no potentiometer adjustments
- Remote TEACH-function for security and convenience
- Output response is programmable for three speeds
- Choose 2 m or 9 m unterminated cable, or 8-pin Euro-style swivel quick-disconnect connector
- Rugged construction withstands demanding sensing environments; IEC IP67, NEMA 6

WARNING: Not To Be Used for Personnel **Protection**

Never use this device as a sensing device for personnel **protection.** Doing so could lead to serious injury or death. This device does not include the self-checking redundant circuitry necessary to allow its use in personnel safety applications. A sensor failure or malfunction can cause either an energized or de-energized sensor output condition.

CAUTION: Do Not Disassemble for Repair

This device contains no user-serviceable components. Do not attempt to disassemble for repair. Use of controls or adjustments or performance of procedures other than those specified herein may result in hazardous radiation exposure. A defective unit must be returned to the manufacturer.

Models

Models	Sensing Distance	Cable [2]	Discrete Output	Analog Output
LT3PU	300 mm to 5 m (11.8 in to 16.4 ft) with a 90% reflectivity white card	2 m (6.5 ft) 8-wire	PNP (Sourcing)	Analog Voltage (0 V dc to 10 V dc)
LT3PUQ		8-pin Euro-style QD		
LT3NU		2 m (6.5 ft) 8-wire	NPN (Sinking)	
LT3NUQ		8-pin Euro-style QD		
LT3PI		2 m (6.5 ft) 8-wire	PNP (Sourcing)	Analog Current (4 mA to 20 mA)
LT3PIQ		8-pin Euro-style QD		
LT3NI		2 m (6.5 ft) 8-wire	NPN (Sinking)	
LT3NIQ		8-pin Euro-style QD		

Theory of **Operation**

A short electrical pulse drives a semiconductor laser diode to emit a pulse of light. The emitted light is collimated through a lens, which produces a very narrow laser beam. The laser beam bounces off the target, scattering some of its light through the sensor's receiving lens to a photodiode, which creates an electrical pulse. The time interval between the two electrical pulses (transmitting and receiving the beam) is used to calculate the distance to the target, using the speed of light as a constant.

[1] See Banner website for information on diffuse and dual-discrete models at *www.bannerengineering.com*
[2] To order the 9 m cable models, add the suffix W/30 to the model number of a cabled sensor. For example, LT3PU W/30. A model with a QD-connector requires a mating cable.

Multiple pulses are evaluated by the sensor's microprocessor, which calculates the appropriate output value. The analog output provides a variable signal (4 mA to 20 mA or 0 V dc to 10 V dc, depending on model) that is proportional to the target's position within the user-programmed analog window limits. The discrete (switched) output energizes whenever the target is located between the user-programmed discrete window limits. Window limits for the analog and discrete outputs may be the same, or they may be programmed independently.

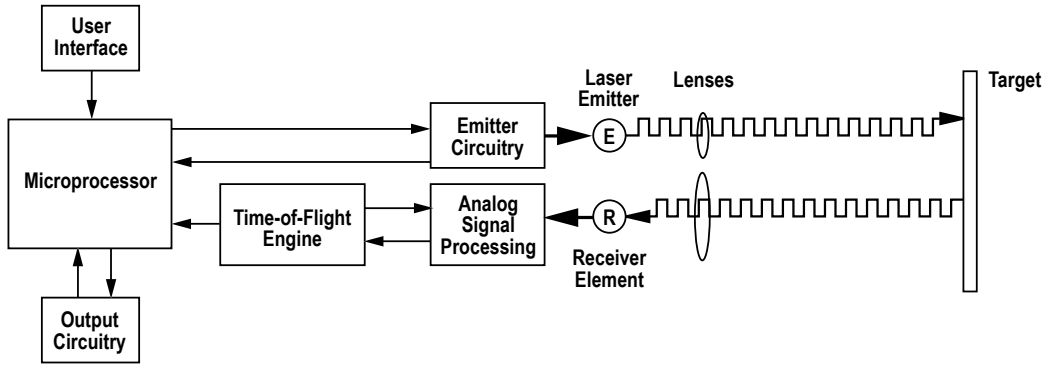

Figure 1. Theory of Operation

Class 2 Laser Safety Notes

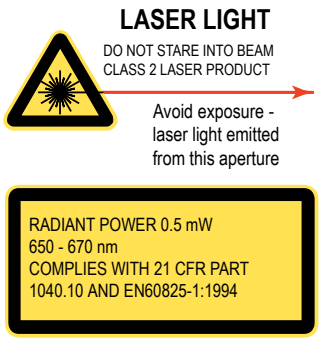

Low-power lasers are, by definition, incapable of causing eye injury within the duration of a blink (aversion response) of 0.25 seconds. They also must emit only visible wavelengths (400 to 700 nm). Therefore, an ocular hazard may exist only if individuals overcome their natural aversion to bright light and stare directly into the laser beam.

These lasers are required to have a "hazard" label and to have an indicator light to indicate that laser emission is occurring.

When operating a Class 2 laser:

- Do not stare at the laser.
- Do not point the laser at a person's eye.
- Mount open laser beam paths either above or below eye level, where practical.
- Terminate the beam emitted by the laser product at the end of its useful path.

Configuration Instructions

Sensor Power-Up and Laser-Enable

Power up the sensor for 30 minutes to allow the sensor's internal temperature to stabilize before operating or attempting to program the sensor. If the sensor is used in applications where the temperature is several degrees higher or lower than the ambient temperature, allow the sensor to stabilize in that condition before programming the window limits. The range decreases when the sensor warms up.

The Laser-Enable feature allows the sensor to be continually powered and enabled only when being used. This eliminates the need for the extended warm-up period between uses.

The sensor's red Signal LED indicates the condition of the received signal from the object being measured. When programming the window limits, this LED must be on (not flashing) for the sensor to accept the setting. To ensure the received signal will not be marginal during operation, move the target object 300 mm beyond the furthest desired switch point during setup and verify the signal LED is still on.

Indicators

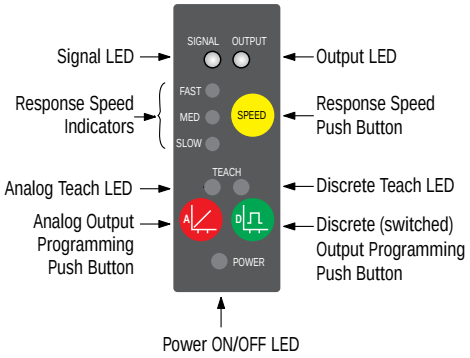

Power ON/OFF LED (green)—Indicates the operating status of the sensor.

Power ON/OFF LED Status	Indicates
Off	Power is off
Flashing at 2 Hz	Discrete output is overloaded (Run mode)
Flashing at 1 Hz	Power is on; laser is disabled
On	Power is on; the sensor is operating normally and the laser is enabled

Power-Up/Laser-Enable Indicators—When powering up the sensor all LEDs turn on for one second. Allow a 0.6-second delay for Laser-Enable.

Selected Response Speed	Laser-Enable Time	Laser-Disable Time
Slow	150 ms	50 ms
Medium	60 ms	
Fast	51 ms	

Output LED (amber)—Lights when a target is sensed within the programmed discrete window.

Response Speed (amber)—Indicates the response speed setting.

Signal LED (red)—Indicates the strength and condition of the sensor's incoming signal.

Signal LED Status	Indicates
On	Good signal
Off	No signal is received or the target is beyond the range limitations of the sensor (with some tolerance beyond the recommended minimum and maximum sensing distance)
Flashing	Marginal signal strength (cannot teach limits)

Response Speed

Before setting window limits, use the sensor's speed button to toggle between the three response speed settings. The selected speed will be indicated by one of the three response speed indicator LEDs.

	Discrete Output Response Speed	Analog Output Frequency Response (-3dB)
Slow	100 ms ON and OFF	4.5 Hz (100 ms average/4 ms update rate)
Medium	10 ms ON and OFF	45 Hz (10 ms average/2 ms update rate)
Fast	1 ms ON and OFF	450 Hz (1 ms average/1 ms update rate)

Programming

Remote Programming—To program the sensor remotely or to disable the keypad, use the Remote Programming function. Disabling the keypad prevents accidental or unauthorized adjustment of the programming settings. Connect the yellow wire of the sensor to +5 V dc to 24 V dc, with a remote programming switch connected between them.

Note: The impedance of the remote teach input is 55 kΩ.

Programming is accomplished by following the sequence of input pulses. The duration of each pulse (corresponding to a push button "click") and the period between multiple pulses are defined as "T": 0.04 seconds ≤ T ≤ 0.8 seconds.

Analog Output Slope—The L-GAGE LT3 Sensor may be programmed for either a positive or a negative output slope, based on which condition is taught first. If the near limit is taught first, the slope will be positive. If the far limit is taught first, the slope will be negative. Banner's unique scalable analog output (patent pending) automatically distributes the output signal across the width of the programmed sensing window.

In the event of analog signal loss for longer than 2 seconds, the analog output goes to 0 V dc or 3.6 mA, which may be used to trigger an alarm.

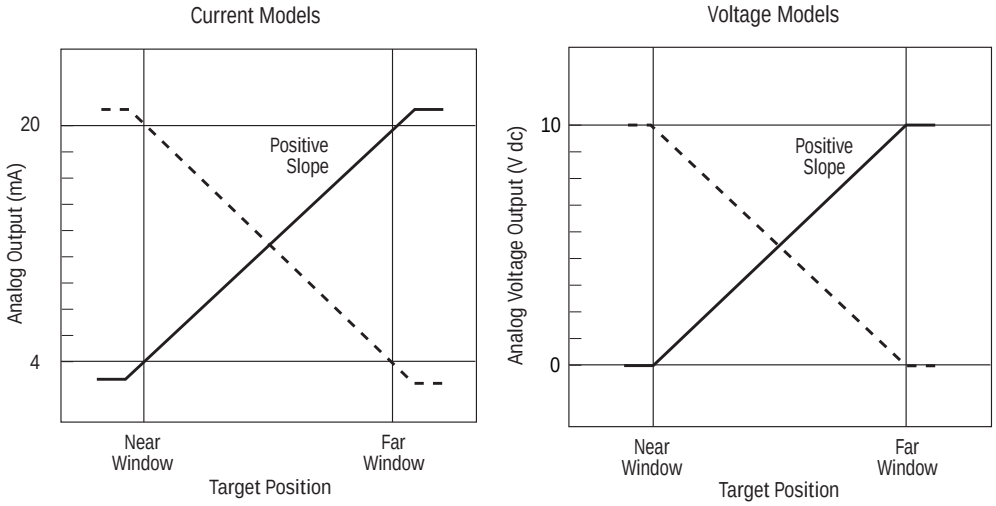

Figure 2. Analog Output as a Function of Target Position

Note: The linear analog output tracks slightly past each window limit (from 3.8 mA to 20.5 mA).

Teaching Limits for Background Suppression

For some applications, ignoring objects beyond a certain distance may be required. To suppress the background, place a target object at the selected distance, and teach the position twice. The sensor's discrete output will activate when an object is detected between the sensor's minimum sensing distance and the taught position.

Note: The sensor allows for some forgiveness in this procedure. If the two limits are not exactly the same (but less than 20 mm apart), the sensor will put the set point at the "average" of the two limits.

Program either analog output or discrete output first. For the button or the remote wire, a button click or pulse is: 0.04 seconds ≤ T ≤ 0.8 seconds.

Teaching Independent Limits for Either Output

Teaching Analog Limits Using the Auto-Zero Feature (Analog Output)—For some analog applications, a sensing distance switch point centered within a sensing window may be required. The TEACH procedure is simple: teaching the same limit twice causes the sensor to program a window centered on the position taught. This window is 1 m wide (taught position ± 0.5 m).

To exit Program mode without saving changes, press and hold the same push button (or hold the remote line high) for longer than 2 seconds (before teaching the second limit). The sensor will revert to the last saved program.

1. Enter programming mode.

Method	**Action**	Result
Push **Button**	Push and hold the button for either output for longer than 2 seconds. The sensor will return to RUN mode if first TEACH-condition is not registered within 120 seconds.	The appropriate TEACH-LED turns ON. The sensor is waiting for first limit.
Remote Input	No action required.	

2. Teach the first limit.

Method	**Action**	Result
Push **Button**	Position the target for the first limit. Click the same button.	The appropriate TEACH LED turns ON then flashes at 2 Hz. The sensor learns the first limit and waits for the second limit.
Remote Input	Position the target for the first limit. For the discrete output, single-pulse the remote line.  For the analog output, double-pulse the remote line. 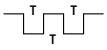	

3. Teach the second limit.

Method	**Action**	Result
Push **Button**	Position the target for the second limit. Click the same button.	The TEACH LED goes OFF. The sensor learns the second limit and returns automatically to Run mode.
Remote Input	Position the target for the second limit and single-pulse the remote line. 	

4. Program the second output by repeating steps two and three.

Teaching **Identical** Limits to Both Outputs

When teaching limits simultaneously, both the outputs will have identical limits.

To exit Program mode without saving changes, press and hold the same push button (or hold the remote line high) for longer than 2 seconds (before teaching the second limit). The sensor will revert to the last saved program.

1. Enter programming mode.

Method	**Action**	Result
Push **Button**	Push and hold the button for either output for longer than 2 seconds. The sensor will return to RUN mode if the first TEACH condition is not registered within 120 seconds.	The appropriate TEACH LED turns ON.
	Briefly click the other output button.	The appropriate TEACH LED turns ON. The sensor is waiting for the first limit.
Remote Input	No action required.	

2. Teach the first limit.

Method	**Action**	Result
Push **Button**	Position the target for the first limit. Click either output button.	Both TEACH LEDs flash at 2 Hz, alternating red and green. The sensor learns the first limit and waits for the second limit.
Remote Input	Position the target for the first limit, then triple-pulse the remote line. 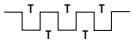	Both TEACH LEDs turn ON. The sensor learns the first limit and waits for the second limit. Both TEACH LEDs flash at 2 Hz, alternating red and green.

3. Teach the second limit.

Method	**Action**	Result
Push **Button**	Position the target for the second limit. Click either output button.	Both TEACH LEDs go OFF. The sensor learns the second limit and returns automatically to Run mode.
Remote Input	Position the target for the second limit, then single-pulse the remote line. 	

Enabling or Disabling the Push **Button**

In addition to its programming function, the remote line may be used to disable the push buttons for security. Disabling the push buttons prevents undesired tampering with the sensor configuration settings.

1. Connect the sensor's gray wire.
2. Four-pulse the remote line to enable or disable the push button.
   The sensor toggles between enable and disable settings and returns to RUN mode.

Installation Instructions

Wiring

NPN Analog Current

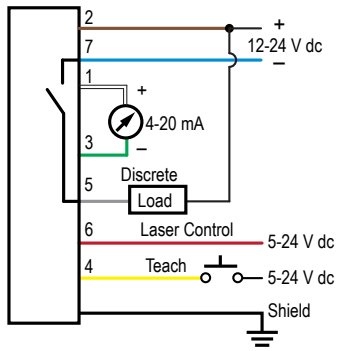

PNP Analog Current

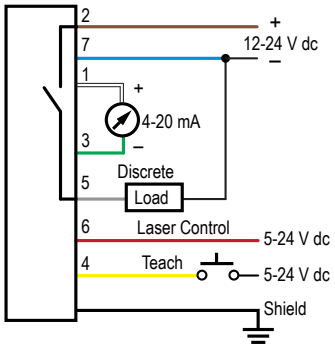

Key

1. White
2. Brown
3. Green
4. Yellow
5. Gray
6. Pink
7. Blue

Quick disconnect (QD) wiring diagrams are functionally identical.

NPN Analog Voltage

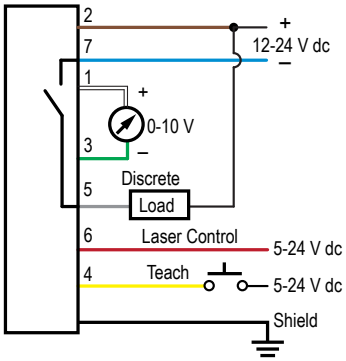

PNP Analog Voltage

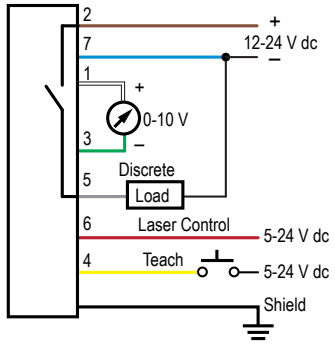

Specifications

Sensing Range **(Diffuse** Model)
90% White card: 0.3 to 5 m
18% Gray card: 0.3 to 3 m
6% Black card: 0.3 to 2 m

Supply Voltage and Current
12 V dc to 24 V dc (10% maximum ripple)
108 mA maximum at 24 V dc or [2600/V dc] mA

Supply **Protection** Circuitry
Protected against reverse polarity and transient voltages

Delay at Power-up
1 second; outputs do not conduct during this time

Sensing Beam
658 nm visible red IEC and CDRH Class 2 laser
Radiant output power: 0.5 mW maximum
Typical beam dia: 6 mm
Typical laser lifetime: 75,000 hours

Output **Protection**
Protected against short circuit conditions

Factory Default **Settings**
100 ms response speed
Analog/discrete window limits 0.3 m to 5 m using a 90% reflectivity white card
Positive analog slope
Push buttons enabled

Laser Control
Enable: connect red wire to +5 to 24 V dc
Disable: connect to 0 to +1.8 V dc (or open connection)

Construction
ABS housing; acrylic window; ABS/polycarbonate blend quick disconnect fitting

Connections
2 m (6.5 ft) or 9 m (30 ft) shielded 7-conductor (with drain) PVC-jacketed attached cable or 8-pin M12/Euro-style quick-disconnect

Output **Rating** (Discrete)
100 mA maximum
Off-state leakage current: < 5 µA
Output saturation NPN: < 200 mV at 10 mA and < 600 mV at 100 mA
Output saturation PNP: < 1.2 V at 10 mA; < 1.6 V at 100 mA

Output **Rating** (Analog)
Voltage output: 2.5 kΩ minimum load impedance
Current output: 1 kΩ maximum at 24 V; maximum load resistance = [Vcc-4.5/0.02 Ω]

Output Response Time (Discrete)
Fast: 1 ms ON and OFF
Medium: 10 ms ON and OFF
Slow: 100 ms ON and OFF

Output Response Time (Analog voltage output (-3 dB))
Fast: 450 Hz (1 ms average/ 1 ms update rate)
Medium: 45 Hz (10 ms average/ 2 ms update rate)
Slow: 4.5 Hz (100 ms average/ 4 ms update rate)

Linearity
± 30 mm from 0.3 to 1.5 m; ± 20 mm from 1.5 to 5 m
(Specified at 24 V dc, 22° C using a 90% reflectance white card)

Temperature **Effect**
Diffuse models: < 2mm / °C

Environmental **Rating**
IEC IP67; NEMA 6

Operating Conditions
0 °C to +50 °C (+32 °F to +122 °F)
90% at +50 °C maximum relative humidity (non-condensing)

Certifications

Application Note
Allow 30-minute warm-up before programming or operating

Output **Configuration**
Discrete (switched): SPST solid-state switch; choose NPN (current sinking) or PNP (current sourcing) models
Analog output: 0 V dc to 10 V dc or 4 mA to 20 mA

Discrete Output Hysteresis **(Diffuse** model)
Fast: 10 mm
Medium: 5mm
Slow: 3mm

Minimum Window Size
Diffuse model: 20 mm

Remote Teach Input
18 kΩ minimum (65 kΩ at 5 V dc)

Resolution/Repeatability
See Performance Curves

Required Overcurrent **Protection**

WARNING: Electrical connections must be made by qualified personnel in accordance with local and national electrical codes and regulations.

Overcurrent protection is required to be provided by end product application per the supplied table.
Overcurrent protection may be provided with external fusing or via Current Limiting, Class 2 Power Supply.
Supply wiring leads < 24 AWG shall not be spliced.
For additional product support, go to *www.bannerengineering.com*.

Supply Wiring (AWG)	Required Overcurrent **Protection** (Amps)
20	5.0
22	3.0
24	2.0
26	1.0
28	0.8
30	0.5

Performance Curves

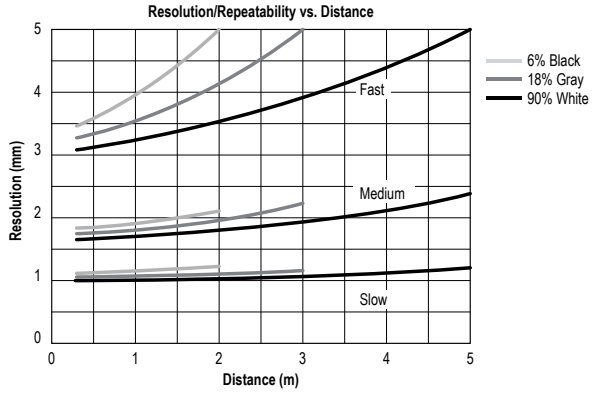

Figure 3. Resolution/Repeatability vs Distance

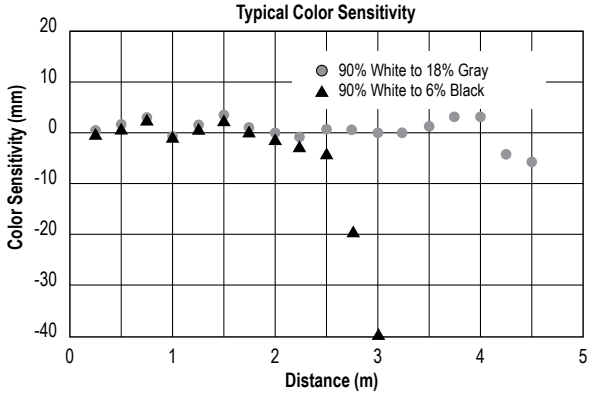

Figure 4. Typical Color Sensitivity

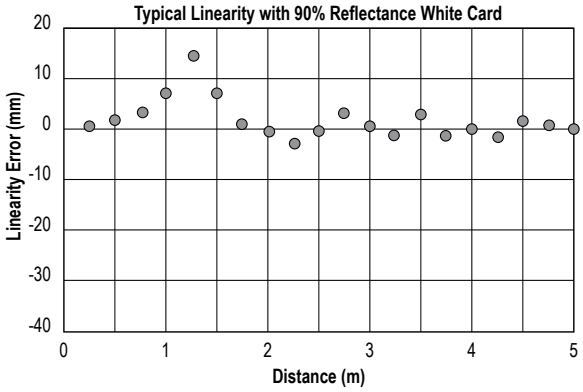

Figure 5. Typical Linearity

Dimensions

Mounting Hardware:

M4 x 0.7 x 40 socket-head cap screw.
M4 x 0.7 hex nut with captured, toothed lock washer.
M3 short-arm hex key.

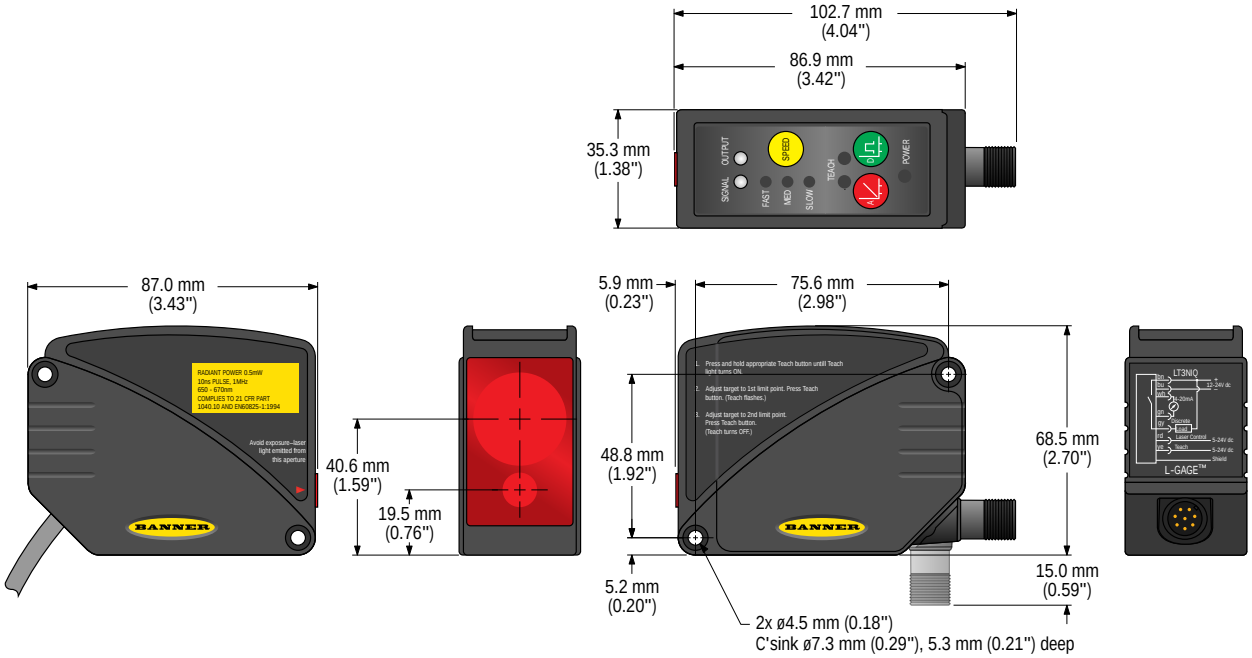

Accessories

8-Pin Threaded M12/Euro-Style Cordsets with Shield				
Model	Length	Style	Dimensions	Pinout (Female)
MQDC-806	1.83 m (6 ft)	Straight	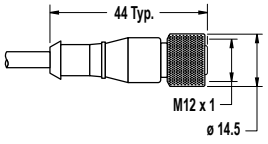	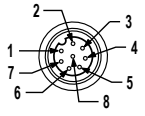

8-Pin Threaded M12/Euro-Style Cordsets with Shield					
Model	Length	Style	Dimensions	Pinout (Female)	
MQDC-815	4.57 m (15 ft)			1 = White 2 = Brown 3 = Green 4 = Yellow	5 = Gray 6 = Pink 7 = Blue 8 = Shield
MQDC-830	9.14 m (30 ft)				

Retroreflectors

Model	**Reflectivity** Factor	Maximum Temperature	Size
BRT-TVHG-8X10P	0.8	+60 °C (+140 °F)	203 × 254 mm

Note: Retroreflective material has a pressure-sensitive adhesive on it. Surfaces must be clean and dry before applying the adhesive. For best results, use a full-size target and trim it if needed.

Mounting Brackets

SMBLT31

- Right-angle bracket
- 300 series stainless steel

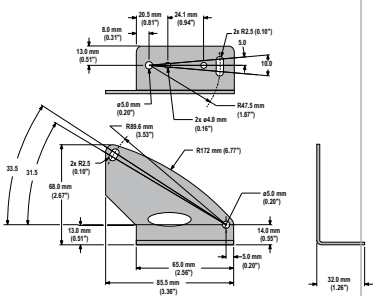

SMBLT3IP

- Replaceable windows for welding environments
- Stainless steel construction
- Includes 2 weld-resistant windows

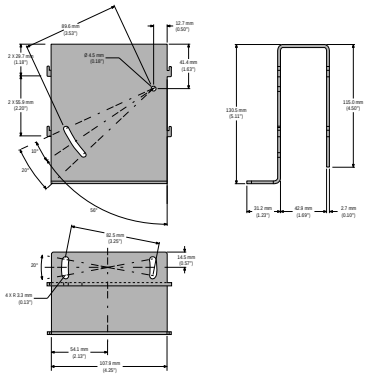

SMBLT32

- Heavy-duty protective bracket
- 304 series stainless steel
- Mounting hardware included

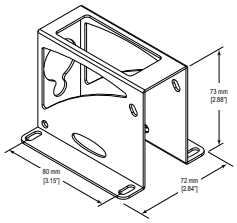

Banner Engineering Corp. Limited Warranty

Banner Engineering Corp. warrants its products to be free from defects in material and workmanship for one year following the date of shipment. Banner Engineering Corp. will repair or replace, free of charge, any product of its manufacture which, at the time it is returned to the factory, is found to have been defective during the warranty period. This warranty does not cover damage or liability for misuse, abuse, or the improper application or installation of the Banner product.

THIS LIMITED WARRANTY IS EXCLUSIVE AND IN LIEU OF ALL OTHER WARRANTIES WHETHER EXPRESS OR IMPLIED (INCLUDING, WITHOUT LIMITATION, ANY WARRANTY OF MERCHANTABILITY OR FITNESS FOR A PARTICULAR PURPOSE), AND WHETHER ARISING UNDER COURSE OF PERFORMANCE, COURSE OF DEALING OR TRADE USAGE.

This Warranty is exclusive and limited to repair or, at the discretion of Banner Engineering Corp., replacement. IN NO EVENT SHALL BANNER ENGINEERING CORP. BE LIABLE TO BUYER OR ANY OTHER PERSON OR ENTITY FOR ANY EXTRA COSTS, EXPENSES, LOSSES, LOSS OF PROFITS, OR ANY INCIDENTAL, CONSEQUENTIAL OR SPECIAL DAMAGES RESULTING FROM ANY PRODUCT DEFECT OR FROM THE USE OR INABILITY TO USE THE PRODUCT, WHETHER ARISING IN CONTRACT OR WARRANTY, STATUTE, TORT, STRICT LIABILITY, NEGLIGENCE, OR OTHERWISE.

Banner Engineering Corp. reserves the right to change, modify or improve the design of the product without assuming any obligations or liabilities relating to any product previously manufactured by Banner Engineering Corp. Any misuse, abuse, or improper application or installation of this product or use of the product for personal protection applications when the product is identified as not intended for such purposes will void the product warranty. Any modifications to this product without prior express approval by Banner Engineering Corp will void the product warranties. All specifications published in this document are subject to change; Banner reserves the right to modify product specifications or update documentation at any time. Specifications and product information in English supersede that which is provided in any other language. For the most recent version of any documentation, refer to: www.bannerengineering.com.

© Banner Engineering Corp. All rights reserved