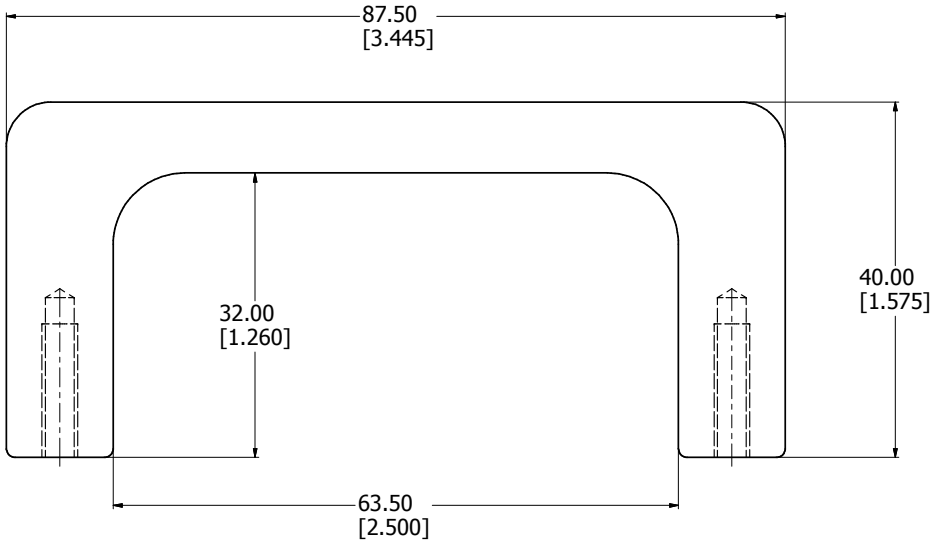

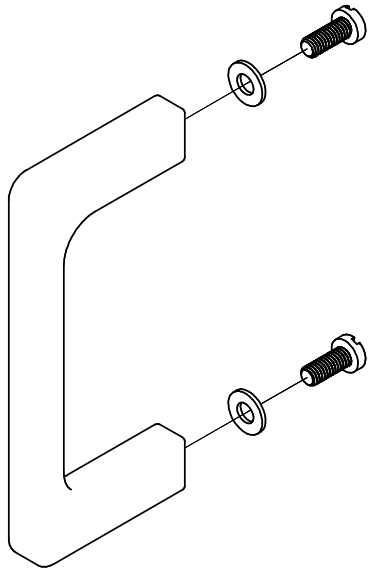

TYPICAL HANDLE ASSEMBLY

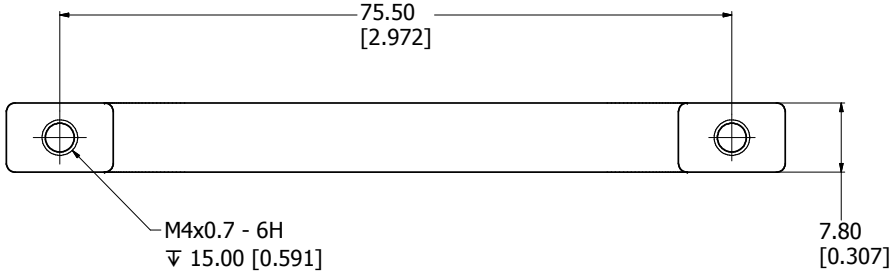

M3299-1231
Handle Material - Aluminum
Finish - Clear Matte Anodized Aluminum (M3299-1231)
- Black Matte Anodized Aluminum (M3299-1233)
Hardware
2 Screws - Panhead M4 x 12
2 Washers
**note handle sold singly

HAMMOND MANUFACTURING™

M3299-123*