Brand of NTN Group

# Technical data

## UC309G2

Insert bearings



Spherical outer diameter, fixing by socket set screw, seal with slinger

## VISUAL (S)

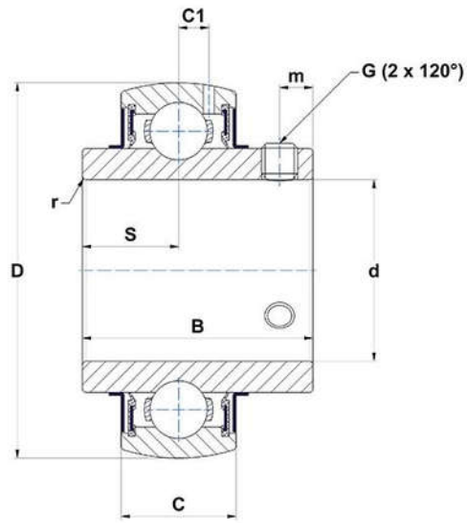


## PRODUCT DEFINITION

| | |
|---|---|
| **Brand** | SNR |
| **B - Width of Inner Ring** | 57 mm |
| **C - Width of Outer Ring** | 30 mm |
| **C1 - Distance center of OR to center of lubrication zone** | 9 mm |
| **d - Shaft diameter** | 45 mm |
| **D - Outer diameter of OR** | 100 mm |
| **G - Set screw size** | M10x1,25 |
| **m - Distance to set screw** | 10 mm |

# UC309G2
Insert bearings

| PRODUCT DEFINITION | |
|---|---|
| **r - Radius Inner Ring** | 2 |
| **S - Distance front side/bearing centre** | 22 mm |
| **f0 - Factor** | 13 |
| **SW - Wrench size** | 5 mm |

| PRODUCT PERFORMANCE | |
|---|---|
| **C - Dynamic load rating** | 53000000 mN |
| **C0 - Static load rating** | 31800000 mN |
| **Operating temperature min.** | 253,15 °K |
| **Operating temperature max.** | 373,15 °K |

| OTHER FEATURES | |
|---|---|
| **Mass** | 1,28 kg |
| **Recommended tightening torque for set screw** | 22 N-m |

| BEARING FREQUENCIES | |
|---|---|
| **BPFO - Over rolling frequency on outer ring (60 rpm)** | 3.04965986394558 Hz |
| **BPFI - Over rolling frequency on inner (60 rpm)** | 4.95034013605442 Hz |
| **BSF - Over rolling frequency on rolling element (60 rpm)** | 3.97143429311596 Hz |
| **BRF - Rotational frequency – rolling element (60 rpm)** | 1.98571714655798 Hz |
| **FTF - Rotational frequency - cage (60 rpm)** | 0.381207482993197 Hz |