JUMO GmbH & Co. KG
Delivery address: Mackenrodtstraße 14
36039 Fulda, Germany
Postal address: 36035 Fulda, Germany
Phone: +49 661 6003-0
Fax: +49 661 6003-607
Email: mail@jumo.net
Internet: www.jumo.net

JUMO Instrument Co. Ltd.
JUMO House
Temple Bank, Riverway
Harlow, Essex, CM20 2DY, UK
Phone: +44 1279 63 55 33
Fax: +44 1279 62 50 29
Email: sales@jumo.co.uk
Internet: www.jumo.co.uk

JUMO Process Control, Inc.
6733 Myers Road
East Syracuse, NY 13057, USA
Phone: +1 315 437 5866
Fax: +1 315 437 5860
Email: info.us@jumo.net
Internet: www.jumousa.com

RTD Temperature Probe for the Food/Pharmaceutical Industry



- **For temperatures between -50 and +250 °C**
- **Protection type up to IP69 according to DIN EN 60529 (IP69K according to DIN 40050)**
- **Hygienic process connection**
- **Stainless steel protection tubes**
- **Available with two-wire transmitter**
- **CIP-compliant insertion**

The RTD temperature probes can be built with terminal heads made of stainless steel or die-cast aluminum.

Various process connections are available for the different requirements of sub-areas in the food/pharmaceutical industry. These include screw connections G 3/8, G 1/2 with CIP-compliant conical seal, taper sockets with union nut (dairy pipe fitting), clamping sockets (clamp), movable ball welding sockets with threaded fitting, welding sockets with CIP-compliant conical seal, VARIVENT® connections, and ball welding sleeves.

Additionally, basic types 902810/40 and 902810/41, which are designed for use with hygienic thermowells according to data sheet 902812, are available.

The protection tubes are made of stainless steel.

The RTD temperature probes for the food/pharmaceutical industry are suitable for use in a temperature range from -50 to +250 °C.

High accuracy is ensured by single or double Pt100 temperature sensors according to DIN EN 60751, class A.
Optional analog or programmable two-wire transmitters can be used for longer transmission distances.

Approvals / approval marks

JUMO GmbH & Co. KG
Delivery address: Mackenrodtstraße 14
36039 Fulda, Germany
Postal address: 36035 Fulda, Germany
Phone: +49 661 6003-0
Fax: +49 661 6003-607
Email: mail@jumo.net
Internet: www.jumo.net

JUMO Instrument Co. Ltd.
JUMO House
Temple Bank, Riverway
Harlow, Essex, CM20 2DY, UK
Phone: +44 1279 63 55 33
Fax: +44 1279 62 50 29
Email: sales@jumo.co.uk
Internet: www.jumo.co.uk

JUMO Process Control, Inc.
6733 Myers Road
East Syracuse, NY 13057, USA
Phone: +1 315 437 5866
Fax: +1 315 437 5860
Email: info.us@jumo.net
Internet: www.jumousa.com

Technical data

Terminal heads	Stainless steel 1.4571, M16 × 1.5; ambient temperature -20 to +100 °C, protection type IP69 according to DIN EN 60529 (IP69K according to DIN 40050), cable screw connection made of plastic Form B DIN 43729, die-cast aluminum, M20 × 1.5; IP65, ambient temperature -40 to +100 °C Form BUZ, die-cast aluminum, M20 × 1.5; IP65, ambient temperature -40 to +100 °C Form BUZH, die-cast aluminum, M20 × 1.5; IP65, ambient temperature -40 to +100 °C Caution: reduced ambient temperature when using transmitters; data sheet 707010, 707030, and 707050
Extension tube (HR)	Stainless steel, length approx. 70 mm, Ø 9 mm
Process connections	Screw connection G 3/8 Screw connection G 1/2 with CIP-compliant conical seal, stainless steel 316 L Clamping socket (clamp) DIN 32676, stainless steel 316 L Clamping socket with union nut (dairy pipe fitting) DIN 11851, stainless steel 316 L Ball welding socket, stainless steel 316 L, PTFE clamping ring Welding socket with CIP-compliant conical seal, stainless steel 316 L, PTFE seal VARIVENT®[a] connection, stainless steel 316 L Ball welding sleeve, stainless steel 316 Ti JUMO PEKA hygienic process connection, stainless steel 316 L
Protection tubes	Stainless steel 316 L Stainless steel 316 Ti, upon request
Measuring insert	Pt100 temperature sensor DIN EN 60751, class A Pt100 temperature sensor DIN EN 60751, class AA
Response times	$t_{0.9}$ = 10 s, in water, flow velocity 0.4 m/s, protection tube diameter 6 mm
Transmitter	Analog transmitter, output 4 to 20 mA, data sheet 707030 Analog transmitter, output 0 to 10 V, data sheet 707030 Programmable transmitter, output 4 to 20 mA/20 to 4 mA, data sheet 707010 Programmable transmitter, output 4 to 20 mA/20 to 4 mA (USB), data sheet 707050

[a] VARIVENT® is a registered trademark of GEA Tuchenhagen.

Approvals / approval marks

Approval mark	Test facility	Certificate / certification number	Inspection basis	Valid for
SIL QUALIFIED PL QUALIFIED	-	-	-	Extra code 058 Basic type 902810/13, 902810/20, 902810/40, and 902810/41 in conjunction with declaration of manufacturer

JUMO GmbH & Co. KG
Delivery address: Mackenrodtstraße 14
36039 Fulda, Germany
Postal address: 36035 Fulda, Germany
Phone: +49 661 6003-0
Fax: +49 661 6003-607
Email: mail@jumo.net
Internet: www.jumo.net

JUMO Instrument Co. Ltd.
JUMO House
Temple Bank, Riverway
Harlow, Essex, CM20 2DY, UK
Phone: +44 1279 63 55 33
Fax: +44 1279 62 50 29
Email: sales@jumo.co.uk
Internet: www.jumo.co.uk

JUMO Process Control, Inc.
6733 Myers Road
East Syracuse, NY 13057, USA
Phone: +1 315 437 5866
Fax: +1 315 437 5860
Email: info.us@jumo.net
Internet: www.jumousa.com

Dimensions

Basic types

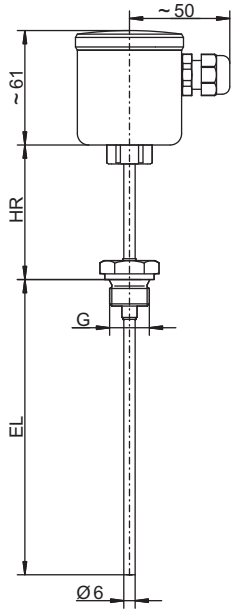

Basic type 902810/20
with process connection PA 104

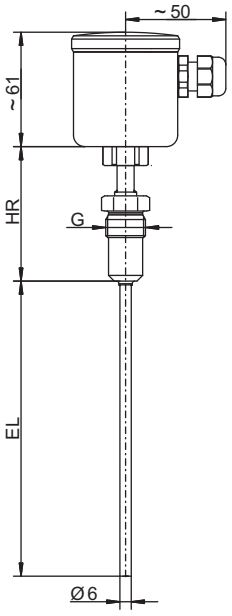

Basic type 902810/20
with process connection PA 380

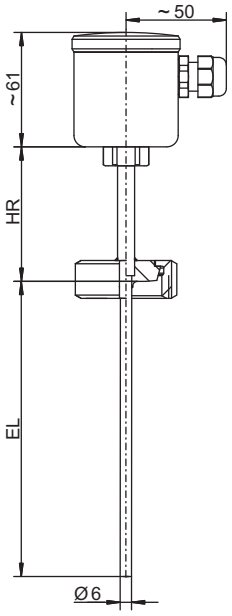

Basic type 902810/20
with process connection PA 601

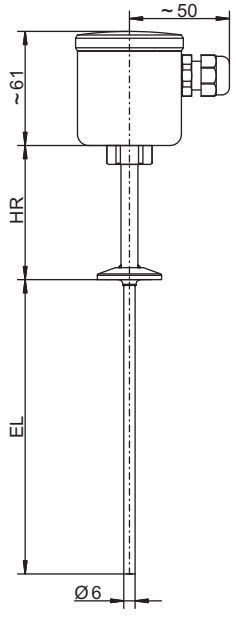

Basic type 902810/20
with process connection PA 611

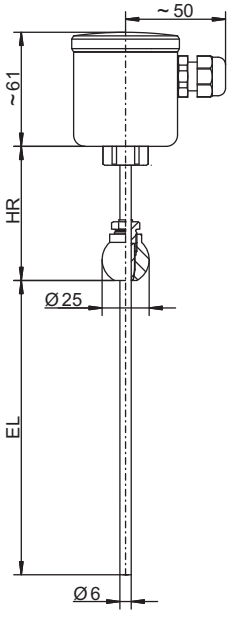

Basic type 902810/20
with process connection PA 681

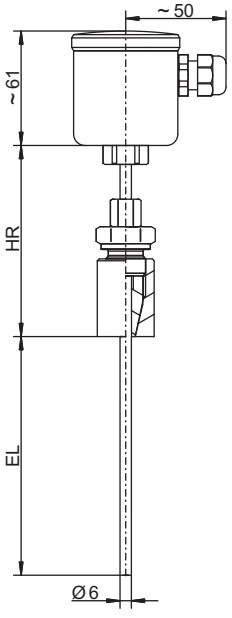

Basic type 902810/20
with process connection PA 682

JUMO GmbH & Co. KG
Delivery address: Mackenrodtstraße 14
36039 Fulda, Germany
Postal address: 36035 Fulda, Germany
Phone: +49 661 6003-0
Fax: +49 661 6003-607
Email: mail@jumo.net
Internet: www.jumo.net

JUMO Instrument Co. Ltd.
JUMO House
Temple Bank, Riverway
Harlow, Essex, CM20 2DY, UK
Phone: +44 1279 63 55 33
Fax: +44 1279 62 50 29
Email: sales@jumo.co.uk
Internet: www.jumo.co.uk

JUMO Process Control, Inc.
6733 Myers Road
East Syracuse, NY 13057, USA
Phone: +1 315 437 5866
Fax: +1 315 437 5860
Email: info.us@jumo.net
Internet: www.jumousa.com

Basic types

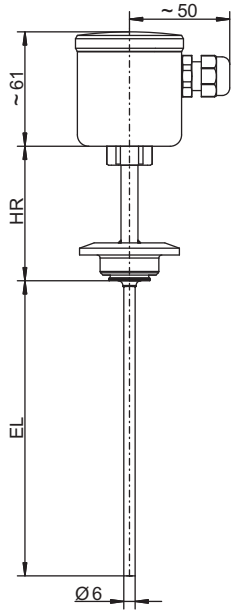

Basic type 902810/20
with process connection PA 684

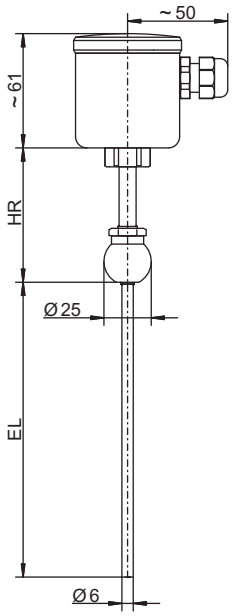

Basic type 902810/20
with process connection PA 840

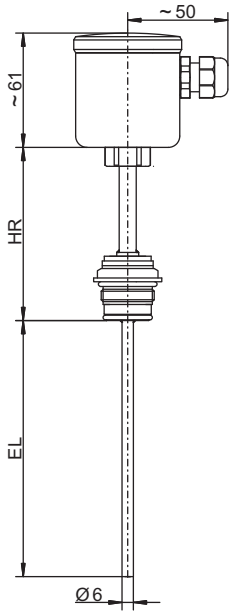

Basic type 902810/20
with process connection PA 997

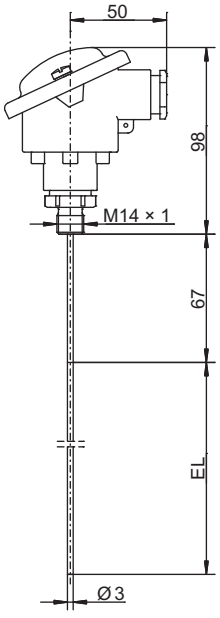

Basic type 902810/40
with process connection PA 120

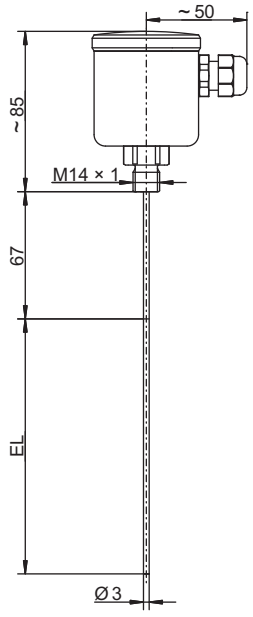

Basic type 902810/41
with process connection PA 120

JUMO GmbH & Co. KG
Delivery address: Mackenrodtstraße 14
36039 Fulda, Germany
Postal address: 36035 Fulda, Germany
Phone: +49 661 6003-0
Fax: +49 661 6003-607
Email: mail@jumo.net
Internet: www.jumo.net

JUMO Instrument Co. Ltd.
JUMO House
Temple Bank, Riverway
Harlow, Essex, CM20 2DY, UK
Phone: +44 1279 63 55 33
Fax: +44 1279 62 50 29
Email: sales@jumo.co.uk
Internet: www.jumo.co.uk

JUMO Process Control, Inc.
6733 Myers Road
East Syracuse, NY 13057, USA
Phone: +1 315 437 5866
Fax: +1 315 437 5860
Email: info.us@jumo.net
Internet: www.jumousa.com

Terminal heads

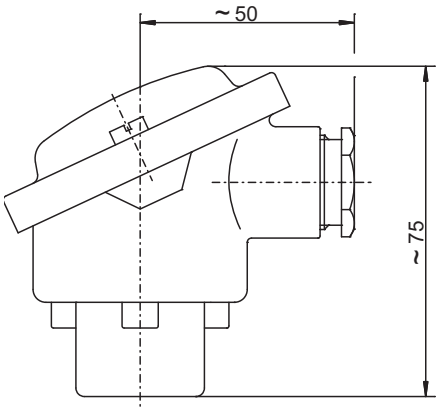

Terminal head form B
Standard for basic type 902810/13 and 902810/40

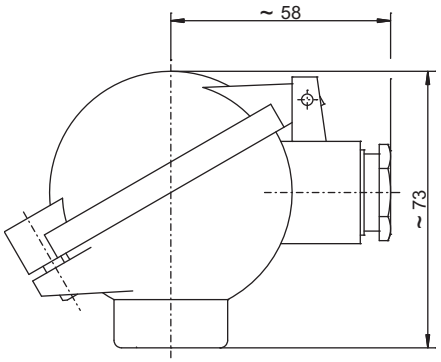

Terminal head form BUZ
Extra code 320

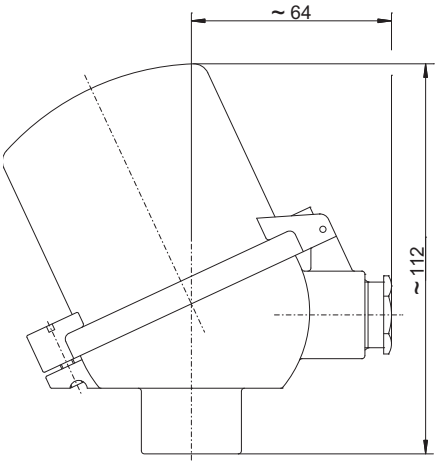

Terminal head form BUZH
Extra code 321

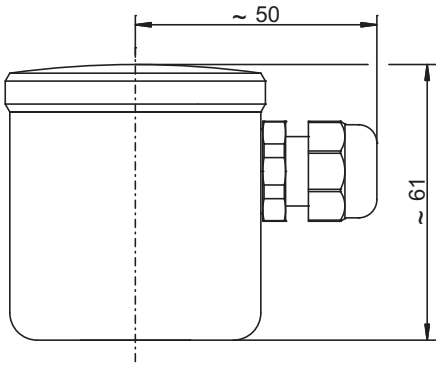

Stainless steel terminal head
Standard for basic type 902810/20 and 902810/41

JUMO GmbH & Co. KG
Delivery address: Mackenrodtstraße 14
36039 Fulda, Germany
Postal address: 36035 Fulda, Germany
Phone: +49 661 6003-0
Fax: +49 661 6003-607
Email: mail@jumo.net
Internet: www.jumo.net

JUMO Instrument Co. Ltd.
JUMO House
Temple Bank, Riverway
Harlow, Essex, CM20 2DY, UK
Phone: +44 1279 63 55 33
Fax: +44 1279 62 50 29
Email: sales@jumo.co.uk
Internet: www.jumo.co.uk

JUMO Process Control, Inc.
6733 Myers Road
East Syracuse, NY 13057, USA
Phone: +1 315 437 5866
Fax: +1 315 437 5860
Email: info.us@jumo.net
Internet: www.jumousa.com

Order details

			(1)	**Basic type**
		902810/13		RTD temperature probe for the food/pharmaceutical industry with terminal head form B
		902810/20		RTD temperature probe for the food/pharmaceutical industry with stainless steel terminal head
			(2)	**Measuring insert**
x	x	1001		1× Pt100 in three-wire circuit
x	x	2001		2× Pt100 in three-wire circuit
			(3)	**Tolerance class according to DIN EN 60751**
x	x	2		Class A (standard)
x	x	3		Class AA
			(4)	**Protection tube diameter D in mm**
x	x	6		Ø 6 mm
			(5)	**Insertion length EL in mm (25 to 400 mm)**
x	x	25		25 mm
x	x	50		50 mm
x	x	100		100 mm
x	x	150		150 mm
x	x	...		Please specify in plain text (50 mm increments)
			(6)	**Process connection**
x	x	103		Screw connection G 3/8
x	x	104		Screw connection G 1/2
x	x	380		Screw connection G 1/2 with CIP-compliant conical seal
x	x	601		Taper socket with union nut DN 10 DIN 11851 (dairy pipe fitting)
x	x	604		Taper socket with union nut DN 25 DIN 11851 (dairy pipe fitting)
x	x	605		Taper socket with union nut DN 32 DIN 11851 (dairy pipe fitting)
x	x	611		Clamping socket (clamp) DN 10/20 DIN 32676
x	x	613		Clamping socket (clamp) DN 25/40 (1"/1.5") DIN 32676
x	x	616		Clamping socket (clamp) DN 50 (2") DIN 32676
x	x	617		Clamping socket (clamp) 2.5" similar to DIN 32676
x	x	681		Ball welding socket with threaded fitting
x	x	682		Welding socket with CIP-compliant conical seal
x	x	684		VARIVENT® connection DN 15/10
x	x	685		VARIVENT® connection DN 32/25
x	x	686		VARIVENT® connection DN 50/40
x	x	840		Ball welding sleeve (material 316 Ti)
x	x	997		JUMO PEKA hygienic process connection[a]
			(7)	**Protection tube material**
x	x	24		Stainless steel 316 L (material-no. 1.4404/1.4435)
x	x	26		Stainless steel 316 Ti (material-no. 1.4571) (upon request)
			(8)	**Extra code**
x	x	000		None
x	x	058		SIL and PL-compatible
x	x	305		Without extension tube (only with process connections 104 and 380)
x		320		Terminal head form BUZ
x		321		Terminal head form BUZH
x	x	330		1× analog transmitter, output 4 to 20 mA[b], data sheet 707030 (only for measuring insert 1× Pt100 in two-wire or three-wire circuit, not in conjunction with extra code 058)
x	x	331		1× programmable transmitter, output 4 to 20 mA/20 to 4 mA[c], data sheet 707010 (only for measuring insert 1× Pt100, not in conjunction with extra code 058)
x	x	333		1× analog transmitter, output 0 to 10 V[b], data sheet 707030 (only for measuring insert 1× Pt100 in two-wire or three-wire circuit, not in conjunction with extra code 058)

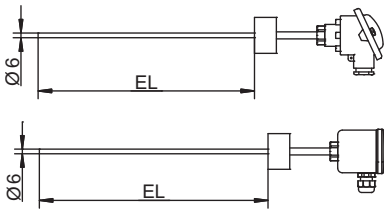

JUMO GmbH & Co. KG
Delivery address: Mackenrodtstraße 14
36039 Fulda, Germany
Postal address: 36035 Fulda, Germany
Phone: +49 661 6003-0
Fax: +49 661 6003-607
Email: mail@jumo.net
Internet: www.jumo.net

JUMO Instrument Co. Ltd.
JUMO House
Temple Bank, Riverway
Harlow, Essex, CM20 2DY, UK
Phone: +44 1279 63 55 33
Fax: +44 1279 62 50 29
Email: sales@jumo.co.uk
Internet: www.jumo.co.uk

JUMO Process Control, Inc.
6733 Myers Road
East Syracuse, NY 13057, USA
Phone: +1 315 437 5866
Fax: +1 315 437 5860
Email: info.us@jumo.net
Internet: www.jumousa.com

x	x	365	Inspection certificate 3.1 DIN EN 10204 (insulation resistance)
x	x	367	Inspection certificate 3.1 DIN EN 10204 (pressure test)
x	x	368	Inspection certificate 3.1 DIN EN 10204 (leakage test)
x	x	374	Inspection certificate 3.1 DIN EN 10204 (material)
	x	425	Cable screw connection made of stainless steel
x	x	452	Wetted, electrolytically polished parts, surface roughness Ra ≤ 0.8 µm (not for process connections 104, 681, 682, and 840)
x	x	550	1× programmable transmitter, output 4 to 20 mA/20 to 4 mA[c] (USB), data sheet 707050 (only for measuring insert 1× Pt100, not in conjunction with extra code 058)
x	x	810	Welding socket G 1/2 (only for process connection 380 and protection tube material 24)

[a] For corresponding process connection adapter, see data sheet 409711
[b] Specify measuring range in plain text.
[c] Specify measuring range and output signal in plain text.

	(1)		(2)		(3)		(4)		(5)		(6)		(7)		(8)	
Order code		-		-		-		-		-		-		/		, ...[a]
Order example	902810/13	-	1001	-	2	-	6	-	100	-	380	-	24	/	000	

[a] List extra codes in sequence, separated by commas.

JUMO GmbH & Co. KG
Delivery address: Mackenrodtstraße 14
36039 Fulda, Germany
Postal address: 36035 Fulda, Germany
Phone: +49 661 6003-0
Fax: +49 661 6003-607
Email: mail@jumo.net
Internet: www.jumo.net

JUMO Instrument Co. Ltd.
JUMO House
Temple Bank, Riverway
Harlow, Essex, CM20 2DY, UK
Phone: +44 1279 63 55 33
Fax: +44 1279 62 50 29
Email: sales@jumo.co.uk
Internet: www.jumo.co.uk

JUMO Process Control, Inc.
6733 Myers Road
East Syracuse, NY 13057, USA
Phone: +1 315 437 5866
Fax: +1 315 437 5860
Email: info.us@jumo.net
Internet: www.jumousa.com

			(1)	**Basic type**
		902810/40		RTD temperature probe for the food/pharmaceutical industry with terminal head form B and adaptation system for thermowell 902812/10 (please select associated thermowells in data sheet 902812)
		902810/41		RTD temperature probe for the food/pharmaceutical industry with stainless steel terminal head and adaptation system for thermowell 902812/10 (please select associated thermowells in data sheet 902812)
			(2)	**Measuring insert**
x	x	1003		1 × Pt100 in two-wire circuit
x	x	1011		1 × Pt100 in four-wire circuit
x	x	2003		2× Pt100 in two-wire circuit
			(3)	**Tolerance class according to DIN EN 60751**
x	x	2		Class A (standard)
x	x	3		Class AA
			(4)	**Protection tube diameter D in mm**
x	x	3		Ø 3 mm
			(5)	**Insertion length EL in mm** (The dimension EL must be identical to that of the selected hygienic thermowell 902812/10, data sheet 902812)
x	x	50		50 mm
x	x	100		100 mm
x	x	150		150 mm
			(6)	**Process connection**
x	x	120		Screw connection M14 × 1 for adapting hygienic thermowells
			(7)	**Protection tube material**
x	x	20		Stainless steel
			(8)	**Extra code**
x	x	000		None
x	x	058		SIL and PL-compatible
x		320		Terminal head form BUZ
x		321		Terminal head form BUZH
x	x	330		1× analog transmitter, output 4 to 20 mA[a], data sheet 707030 (only for measuring insert 1× Pt100 in two-wire or three-wire circuit, not in conjunction with extra code 058)
x	x	331		1× programmable transmitter, output 4 to 20 mA/20 to 4 mA[b], data sheet 707010 (only for measuring insert 1× Pt100, not in conjunction with extra code 058)
x	x	333		1× analog transmitter, output 0 to 10 V[a], data sheet 707030 (only for measuring insert 1× Pt100 in two-wire or three-wire circuit, not in conjunction with extra code 058)
	x	425		Cable screw connection made of stainless steel
x	x	550		1× programmable transmitter, output 4 to 20 mA/20 to 4 mA[b] (USB), data sheet 707050 (only for measuring insert 1× Pt100, not in conjunction with extra code 058)

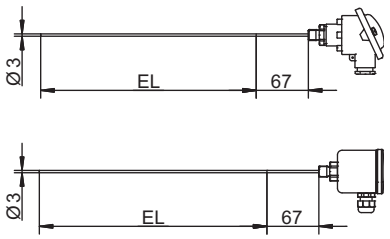

[a] Specify measuring range in plain text.
[b] Specify measuring range and output signal in plain text.

	(1)		(2)		(3)		(4)		(5)		(6)		(7)		(8)	
Order code		-		-		-		-		-		-		/		, ...[a]
Order example	902810/40	-	1003	-	2	-	3	-	50	-	120	-	20	/	000	

[a] List extra codes in sequence, separated by commas.

JUMO GmbH & Co. KG
Delivery address: Mackenrodtstraße 14
36039 Fulda, Germany
Postal address: 36035 Fulda, Germany
Phone: +49 661 6003-0
Fax: +49 661 6003-607
Email: mail@jumo.net
Internet: www.jumo.net

JUMO Instrument Co. Ltd.
JUMO House
Temple Bank, Riverway
Harlow, Essex, CM20 2DY, UK
Phone: +44 1279 63 55 33
Fax: +44 1279 62 50 29
Email: sales@jumo.co.uk
Internet: www.jumo.co.uk

JUMO Process Control, Inc.
6733 Myers Road
East Syracuse, NY 13057, USA
Phone: +1 315 437 5866
Fax: +1 315 437 5860
Email: info.us@jumo.net
Internet: www.jumousa.com

Stock versions

Order code	Part no.
902810/20-1001-2-6-25-380-24/452	00466457
902810/20-1001-2-6-100-380-24/452	00381830
902810/20-1001-2-6-25-611-24/452	00407336
902810/20-1001-2-6-25-613-24/452	00405849

Accessories for transmitter type 707014 (data sheet 707010)

Description	Part no.
Setup program, multilingual	00605080
PC interface with USB/TTL converter	00456352

Accessories for transmitter type 707050 (data sheet 707050)

Description	Part no.
Setup program, multilingual	00574959
USB cable, A connector to Mini-B connector, length 3 m	00506252