LX Series Part-Sensing Light Curtain

Datasheet

For sensing small or flat parts at high speeds



- Emitter and receiver pair produce a strobed web of modulated light beams in 12 lengths and two sensing ranges
- Simple, economical and highly reliable means of sensing small parts or flat items which pass anywhere through the light screen
- Response speeds as fast as 0.8 ms with an output that includes a 5 ms pulse stretcher for interfacing reliability
- Simple wiring configuration; emitter and receiver do not need a synchronization wire
- Rugged, self-contained and compact construction; rated IEC IP65
- Bipolar design offers both NPN (current sinking) and PNP (current sourcing) solid-state outputs

WARNING:

- **Do not use this device for personnel protection**
- Using this device for personnel protection could result in serious injury or death.
- This device does not include the self-checking redundant circuitry necessary to allow its use in personnel safety applications. A device failure or malfunction can cause either an energized (on) or de-energized (off) output condition.

Models

An LX Series Part-Sensing Light Curtain system requires an emitter and receiver pair that match in range and sensing array length.

Emitter Models	Receiver Models	Range	Sensing Array Length
LX3ESR	**LX3RSR**	75 mm to 200 mm (3 in to 8 in) 5.6 mm dia. Minimum Object Detection Size	67 mm (2.6 in)
LX6ESR	**LX6RSR**		143 mm (5.6 in)
LX12ESR	**LX12RSR**		295 mm (11.6 in)
LX3E	**LX3R**	150 mm to 2 m (6 in to 6.5 ft) 9.5 mm dia. Minimum Object Detection Size	67 mm (2.6 in)
LX6E	**LX6R**		143 mm (5.6 in)
LX9E	**LX9R**		218 mm (8.6 in)
LX12E	**LX12R**		295 mm (11.6 in)
LX15E	**LX15R**		371 mm (14.6 in)
LX18E	**LX18R**		447 mm (17.6 in)
LX21E	**LX21R**		523 mm (20.6 in)
LX24E	**LX24R**		599 mm (23.6 in)
LX27E	**LX27R**		686 mm (27 in)
LX30E	**LX30R**		762 mm (30 in)
LX33E	**LX33R**		838 mm (33 in)
LX36E	**LX36R**		914 mm (35.9 in)

Additional sizes available on request; contact Banner Engineering. The 2 m (6.5 ft) unterminated 5-wire PVC cable models are listed. To order the 150 mm (6 in) cable with the 5-pin M12 QD model, add the suffix “Q” to model number (for example, **LX3EQ**). Models with a quick disconnect require a mating cordset.

Theory of Operation

The LX Series light screen sensing system consists of two self-contained units: an emitter and a receiver of equal size and sensing range. The emitter has multiple infrared LEDs spaced at 9.5 mm (0.38 in) increments, and the receiver has corresponding photodiodes. The emitter sequentially fires each infrared LED. Multiple photodiodes in the receiver recognize each of the emitted pulses; the result is a “cross-hatched” optical pattern. Optical synchronization enables the receiver to recognize light from each of the emitter LEDs.

The optical crosshatch pattern enables the LX system to detect targets of very small diameter, and extremely thin, flat objects—as thin as a piece of paper or an envelope. For small diameter objects, the sensing resolution is less effective at the exact center (see the minimum object detection size specification) of the sensing range and at the extreme edges of the pattern (close to the emitter and receiver faces); sensing should take place within the center 80 percent of the range, as shown.

Figure 1. LX Series optical crosshatch pattern

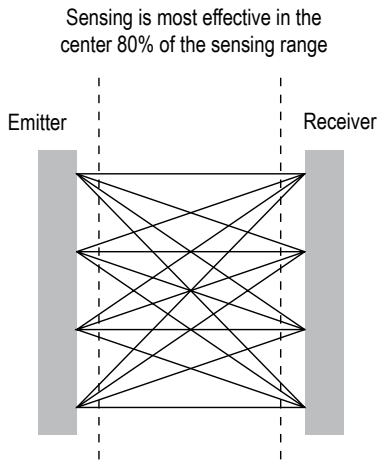

LX Series sensors are available in two ranges: short and standard. Short-range emitters and receivers may be located as close together as 75 mm (3 in), with a maximum separation of 200 mm (8 in). Standard-range sensors may be separated 150 mm to 2 m (6 in to 6.5 ft) apart. Both emitter and receiver must be either short-range or standard models, of the same length. Detection sensitivity varies somewhat, depending on the distance between the sensors and the position of the target object.

For closer-range applications, the working range of any sensor pair can be reduced by connecting the sensor’s Select wire to 0 V DC to 2 V DC (see the sensing range specification).

The receiver output interfaces directly with DC loads or circuits up to 30 V DC, and offers both sinking (NPN) and sourcing (PNP) output transistors. Outputs conduct whenever a beam is broken. A 5 millisecond pulse stretcher (OFF-delay) is included to improve interfacing reliability.

Typical Applications

Typical applications for the LX Series include parts ejection verification and package detection on a conveyor.

Installation and Alignment

Reliable performance of the LX series light screen systems requires a simple alignment process. Mount the sensor in a location as free from vibration as possible.

Sensors may be mounted using the accessory brackets (available separately) or using the T-slots in the sensor housings. After mechanical alignment is completed, the sensors can be wired and power applied.

1. Loosely mount the emitter and receiver at their operating locations with their front panels opposite each other, and at approximately the same level.
2. Adjust the emitter position until the receiver detects alignment (the yellow LED turns OFF). For best alignment, position the emitter in the middle of the positions that cause a clear receiver condition.
3. Tighten the bracket hardware.
4. Position a pencil or similar object within the sensing area to verify that it can be reliably detected throughout the sensing area.

Wiring Diagrams

Figure 2. Wiring for the integral cable models

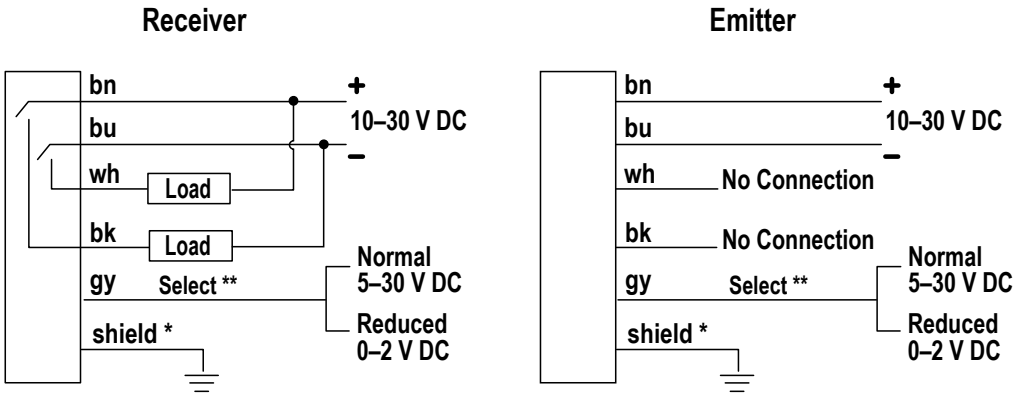

Figure 3. Wiring for the quick disconnect models

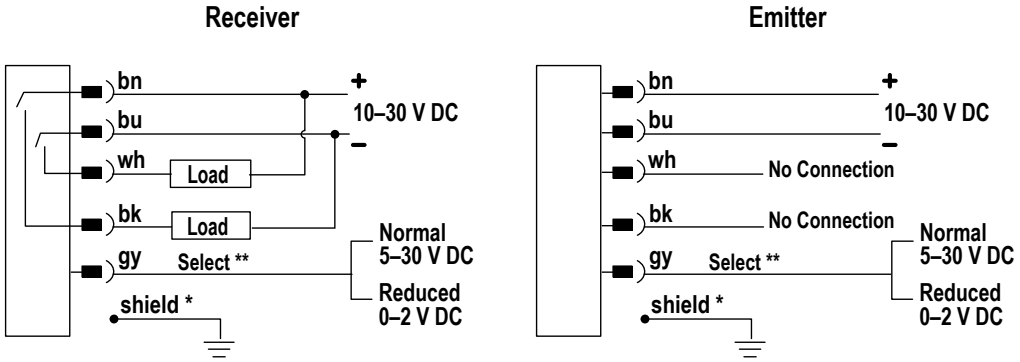

* Banner recommends connecting the shield wire to earth ground or DC common.

** If there is no connection, the Normal Range will be used.

Specifications

Supply Voltage and Power

10 V DC to 30 V DC (10% maximum ripple) at less than 1 watt each for emitter and receiver (exclusive of load)

Supply Protection Circuitry

Protected against reverse polarity and transient voltages

Sensing Range

Models	Normal	Reduced
Short-Range	100 to 200 mm (4 in to 8 in)	75 to 150 mm (3 in to 6 in)
Standard-Range	300 mm to 2 m (1 ft to 6.5 ft)	150 mm to 600 mm (6 in to 24 in)

See Wiring Diagrams on p. 3

Output Configuration

Bipolar: One current sourcing (PNP) and one current sinking (NPN) open-collector transistor

Output Rating

125 mA maximum each output
Off-state leakage current: less than 5 microamps
Output saturation voltage (PNP output): < 1 V at 10 mA and < 1.5 V at 100 mA
Output saturation voltage (NPN output): < 0.5 V at 10 mA and < 0.6 V at 100 mA

Output Protection Circuitry

Protected against false pulse on power-up and continuous overload or short circuit of outputs

Minimum Object Detection Size (MODS)

Smallest diameter rod that can be detected in sensing range:
Short-Range: 5.6 mm (0.22 in)
Standard-Range: 9.5 mm (0.38 in)

Indicators

Emitter:

- **LED1 (green)**
  - **ON:** Power ON, good sensor
  - **OFF:** Reduced Range
  - **ON:Power ON, good sensor**
- **LED2 (red)**
  - **ON:** Reduced range
  - **OFF:** Normal range
  - **Flashing:** Emitter hardware failure

Receiver

- **LED1 (yellow)**
  - **ON:** Output conducting
  - **OFF:** Output not conducting
- **LED2 (bicolor green/red)**
  - **Green:** Normal range
  - **Red:** Reduced range
  - **Flashing Red:** Receiver hardware failure

Output Response Time

LX3: 0.8 ms ON-time; 6 ms OFF-time (5 ms OFF-delay)
LX6: 1.6 ms ON-time; 7 ms OFF-time (5 ms OFF-delay)
LX9: 2.4 ms ON-time; 7.5 ms OFF-time (5 ms OFF-delay)
LX12: 3.2 ms ON-time; 8.5 ms OFF-time (5 ms OFF-delay)
LX15: 4.0 ms ON-time; 9 ms OFF-time (5 ms OFF-delay)
LX18: 4.8 ms ON-time; 10 ms OFF-time (5 ms OFF-delay)
LX21: 5.6 ms ON-time; 11 ms OFF-time (5 ms OFF-delay)
LX24: 6.4 ms ON-time; 11.5 ms OFF-time (5 ms OFF-delay)
LX27: 7.2 ms ON-time; 12 ms OFF-time (5 ms OFF-delay)
LX30: 8 ms ON-time; 13 ms OFF-time (5 ms OFF-delay)
LX33: 8.8 ms ON-time; 14 ms OFF-time (5 ms OFF-delay)
LX36: 9.6 ms ON-time; 15 ms OFF-time (5 ms OFF-delay)

Construction

Aluminum housing, die cast zinc with black e-coat painted endcaps, acrylic lens window

Required Overcurrent Protection

WARNING: Electrical connections must be made by qualified personnel in accordance with local and national electrical codes and regulations.

Overcurrent protection is required to be provided by end product application per the supplied table.
Overcurrent protection may be provided with external fusing or via Current Limiting, Class 2 Power Supply.
Supply wiring leads < 24 AWG shall not be spliced.
For additional product support, go to www.bannerengineering.com.

Supply Wiring (AWG)	Required Overcurrent Protection (Amps)
20	5.0
22	3.0
24	2.0
26	1.0
28	0.8
30	0.5

Connections

2 meter (6.5 ft) 5-conductor (with drain) pvc-jacketed attached cable or a 150 mm (6 in) PVC cable with a 5-pin M12 male quick disconnect, depending on the model

Application Notes

1. The best sensing resolution occurs within the center 80% of the sensing range (Figure 1 on p. 2).
2. Low-profile packages can be reliably detected.
3. Outputs are active while the light screen is interrupted.
4. For reliable detection, successive parts must be spaced up to the total of ON-time plus OFF-time apart. (that is, 12 milliseconds for the LX12)

Environmental Rating

Meets IEC IP65

Operating Conditions

–20 °C to +70 °C (–4 °F to +158 °F)
90% at +50 °C maximum relative humidity (non-condensing)

Certifications

Class 2 Power
UL Environmental Rating: Type 1

Dimensions

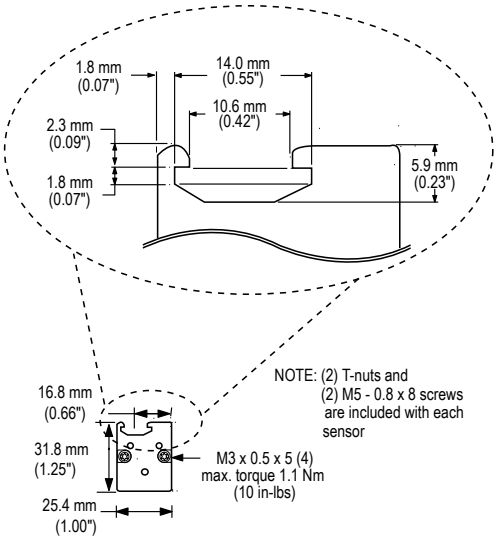

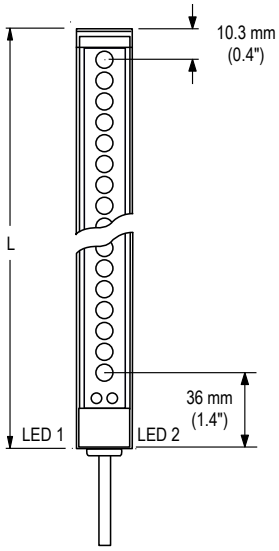

Model	Length (L)
LX3	113.4 mm (4.46 in)
LX6	189.6 mm (7.46 in)
LX9	265.8 mm (10.46 in)
LX12	342 mm (13.46 in)
LX15	418.2 mm (16.46 in)
LX18	494.4 mm (19.46 in)
LX21	570.6 mm (22.46 in)
LX24	646.8 mm (25.46 in)
LX27	723 mm (28.46 in)
LX30	799.2 mm (31.46 in)
LX33	875.4 mm (34.46 in)
LX36	951.6 mm (37.46 in)

Accessories

Quick-Disconnect (QD) Cables

5-Pin Threaded M12 Cordsets with Shield—Single Ended				
Model	**Length**	**Style**	**Dimensions**	**Pinout (Female)**
MQDEC2-506	2 m (6.56 ft)	Straight	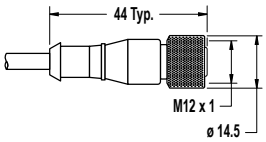	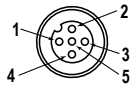 1 = Brown 2 = White 3 = Blue 4 = Black 5 = Gray
MQDEC2-515	5 m (16.4 ft)			
MQDEC2-530	9 m (29.5 ft)			
MQDEC2-550	15 m (49.2 ft)			
MQDEC2-506RA	2 m (6.56 ft)	Right-Angle	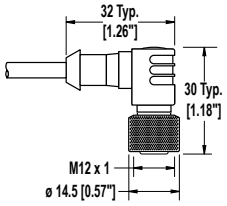	
MQDEC2-515RA	5 m (16.4 ft)			
MQDEC2-530RA	9 m (29.5 ft)			
MQDEC2-550RA	15 m (49.2 ft)			

Mounting Brackets

SMBLX

- End-cap brackets; set of 2
- Zinc-plated cold rolled steel
- *Hardware included for mounting brackets to sensor*

Hole center spacing: A = 12.7

Hole size: A = ø 4.3

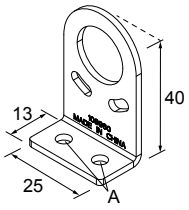

SMBLXR

- Back-mount bracket for secure one-end mounting
- Zinc-plated cold rolled steel
- *Hardware included for mounting bracket to sensor*

Hole center spacing: A , B = 63.5, A to B = 10.2

Hole size: A , B = 5.2 x 11.6

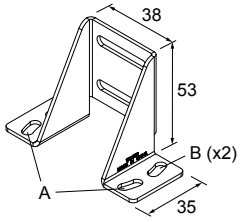

LX Series Lens Shields

Lens Shield Model Number	Fits LX Series Sensor Model	
LXS3	LX3	Self-adhesive polycarbonate lens shields protect the sensor lens window from impact or weld flash. When shields are installed on both emitter and receiver, excess gain is reduced by 36% (maximum operating range reduces by 20%).
LXS6	LX6	
LXS9	LX9	
LXS12	LX12	
LXS15	LX15	
LXS18	LX18	
LXS21	LX21	
LXS24	LX24	
LSX36	LX36	

Banner Engineering Corp. Limited Warranty

Banner Engineering Corp. warrants its products to be free from defects in material and workmanship for one year following the date of shipment. Banner Engineering Corp. will repair or replace, free of charge, any product of its manufacture which, at the time it is returned to the factory, is found to have been defective during the warranty period. This warranty does not cover damage or liability for misuse, abuse, or the improper application or installation of the Banner product.

THIS LIMITED WARRANTY IS EXCLUSIVE AND IN LIEU OF ALL OTHER WARRANTIES WHETHER EXPRESS OR IMPLIED (INCLUDING, WITHOUT LIMITATION, ANY WARRANTY OF MERCHANTABILITY OR FITNESS FOR A PARTICULAR PURPOSE), AND WHETHER ARISING UNDER COURSE OF PERFORMANCE, COURSE OF DEALING OR TRADE USAGE.

This Warranty is exclusive and limited to repair or, at the discretion of Banner Engineering Corp., replacement. **IN NO EVENT SHALL BANNER ENGINEERING CORP. BE LIABLE TO BUYER OR ANY OTHER PERSON OR ENTITY FOR ANY EXTRA COSTS, EXPENSES, LOSSES, LOSS OF PROFITS, OR ANY INCIDENTAL, CONSEQUENTIAL OR SPECIAL DAMAGES RESULTING FROM ANY PRODUCT DEFECT OR FROM THE USE OR INABILITY TO USE THE PRODUCT, WHETHER ARISING IN CONTRACT OR WARRANTY, STATUTE, TORT, STRICT LIABILITY, NEGLIGENCE, OR OTHERWISE.**

Banner Engineering Corp. reserves the right to change, modify or improve the design of the product without assuming any obligations or liabilities relating to any product previously manufactured by Banner Engineering Corp. Any misuse, abuse, or improper application or installation of this product or use of the product for personal protection applications when the product is identified as not intended for such purposes will void the product warranty. Any modifications to this product without prior express approval by Banner Engineering Corp will void the product warranties. All specifications published in this document are subject to change; Banner reserves the right to modify product specifications or update documentation at any time. Specifications and product information in English supersede that which is provided in any other language. For the most recent version of any documentation, refer to: www.bannerengineering.com.

For patent information, see www.bannerengineering.com/patents.

© Banner Engineering Corp. All rights reserved