PRODUCT DETAILS

ARTICLE: 32103B

WHEEL LB 100X40/40 PLAIN BORE SWIVEL FORK M22L/50



Wheel series LB

Wheels with black polyamide 6 centre, blue elastic non-marking rubber mould-on solid tyre available with ball bearings, standard or stainless steel roller bearings od plain bore.
Plain bore wheel.

Castor series M22

M22 series, Medium-light pressed steel fork assemblies; swivel version has double ball raceways. Zincplated.

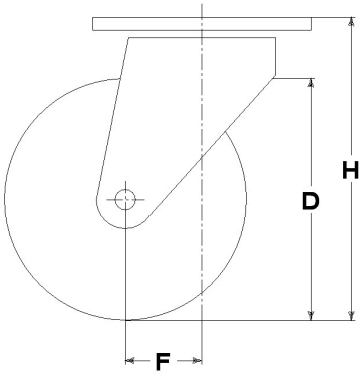

Technical data

Wheel diameter	D	100 mm
Tyre width	E	40,0 mm
Bore diameter	d	15 mm
Weight article		0,940 kg
Hub width	L	40 mm
Overall height	H	129 mm
Top plate outer dimensions	AxB	102x83 mm
Bolt hole spacing	axb	80x60 mm
Fixing bolt diameter	g	M8
Offset	F	46 mm
Fork width	U	50 mm
Load Capacity		150 kg

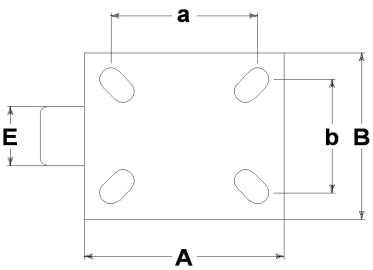

Related Articles

Spare part wheel: 30108B
Version with trailing brake: 32103BFR

GENERAL INFORMATION / RECOMMENDATIONS AND WARNINGS
The cited text and the complete catalogue in their most up-dated versions are available in the OEM's website page www.lagspa.it/downloads. The dimensions, descriptions, specifications and illustrations herein are indicative and subject to variations without notice. The fact that products are illustrated herein does not necessarily imply they are available from stock nor does it place us under any obligation to supply them.
Tests carried out refer to the original products with original accessories: the replacement of one of the components with others of different manufacture might prevent the same results from being achieved and will automatically invalidate any guarantee. Please contact our technical service concerning any special application.