

Retroreflective sensor
OBR2500-12GM40-E5

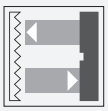

- Robust M12 threaded housing
- Less space required
- Glare protected with polarization filter
- Light-on/dark-on, programmable
- Degree of protection IP67

Retroreflective sensor with polarization filter, M12 threaded housing design, metal housing, front optical face, 2500 mm detection range, red light, light/dark on, 1 PNP output, fixed cable

Dimensions

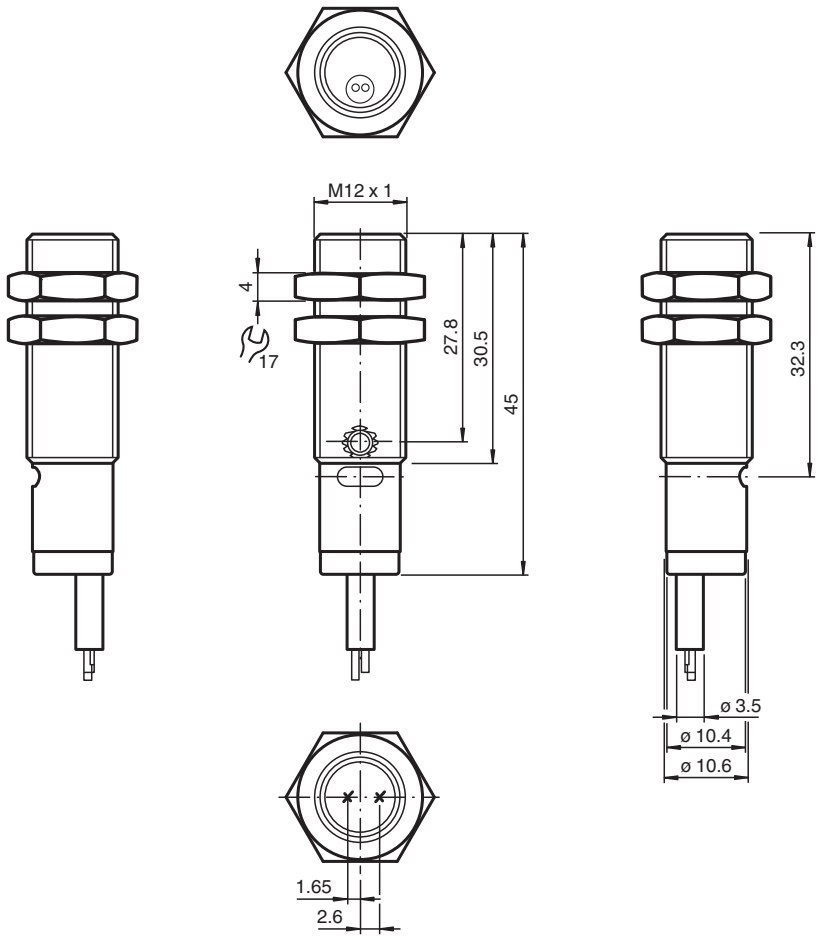

Technical Data

General specifications	
Effective detection range	0 ... 2500 mm

Release date: 2024-08-05 Date of issue: 2024-08-05 Filename: 257819_eng.pdf

Technical Data

Reflector distance		50 ... 2500 mm
Threshold detection range		3000 mm
Reference target		H50 reflector
Light source		LED
Light type		red , 640 nm
Polarization filter		yes
Angle deviation		+/- 2 °
Diameter of the light spot		approx. 150 mm at a distance of 2500 mm
Opening angle		approx. 3.5 °
Optical face		frontal
Ambient light limit		EN 60947-5-2 20000 Lux
Functional safety related parameters		
$MTTF_d$		800 a
Mission Time (T_M)		20 a
Diagnostic Coverage (DC)		0 %
Indicators/operating means		
Operation indicator		LED green: Power on
Function indicator		LED yellow: lights up when receiving the light beam ; flashes when falling short of the operating reserve; OFF when light beam is interrupted
Control elements		sensitivity adjustment
Electrical specifications		
Operating voltage	U_B	10 ... 30 V DC , class 2
Ripple		10 %
No-load supply current	I_0	≤ 15 mA
Input		
Control input		light on +UB dark on: 0 V
Output		
Switching type		light/dark on electrically switchable
Signal output		1 PNP output, short-circuit protected, reverse polarity protected, open collector
Switching voltage		max. 30 V DC
Switching current		max. 100 mA , resistive load
Voltage drop	U_d	≤ 2 V
Switching frequency	f	≤ 1000 Hz
Response time		0.5 ms
Conformity		
Product standard		EN 60947-5-2
Compliance with standards and directives		
Standard conformity		
Standards		UL 508
Approvals and certificates		
UL approval		cULus Listed, Class 2 Power Source, Type 1 enclosure
CCC approval		CCC approval / marking not required for products rated ≤36 V
Approvals		CE, cULus Listed 57M3 (Only in association with UL Class 2 power supply; Type 1 enclosure)
Ambient conditions		
Ambient temperature		-30 ... 60 °C (-22 ... 140 °F)
Storage temperature		-40 ... 70 °C (-40 ... 158 °F)
Mechanical specifications		
Degree of protection		IP67
Connection		2 m fixed cable
Material		
Housing		brass, nickel-plated
Optical face		PMMA

Release date: 2024-08-05 Date of issue: 2024-08-05 Filename: 257819_eng.pdf

Technical Data

Mass	approx. 45 g
Dimensions	
Length	45 mm
Diameter	12 mm
Cable length	2 m

Connection

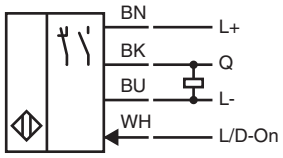

Assembly

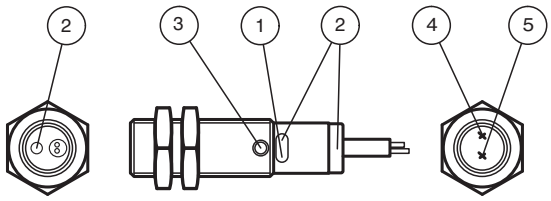

1	Operating display	green
2	Signal display	yellow
3	Potentiometer	
4	Emitter	
5	Receiver	

Relative received light strength

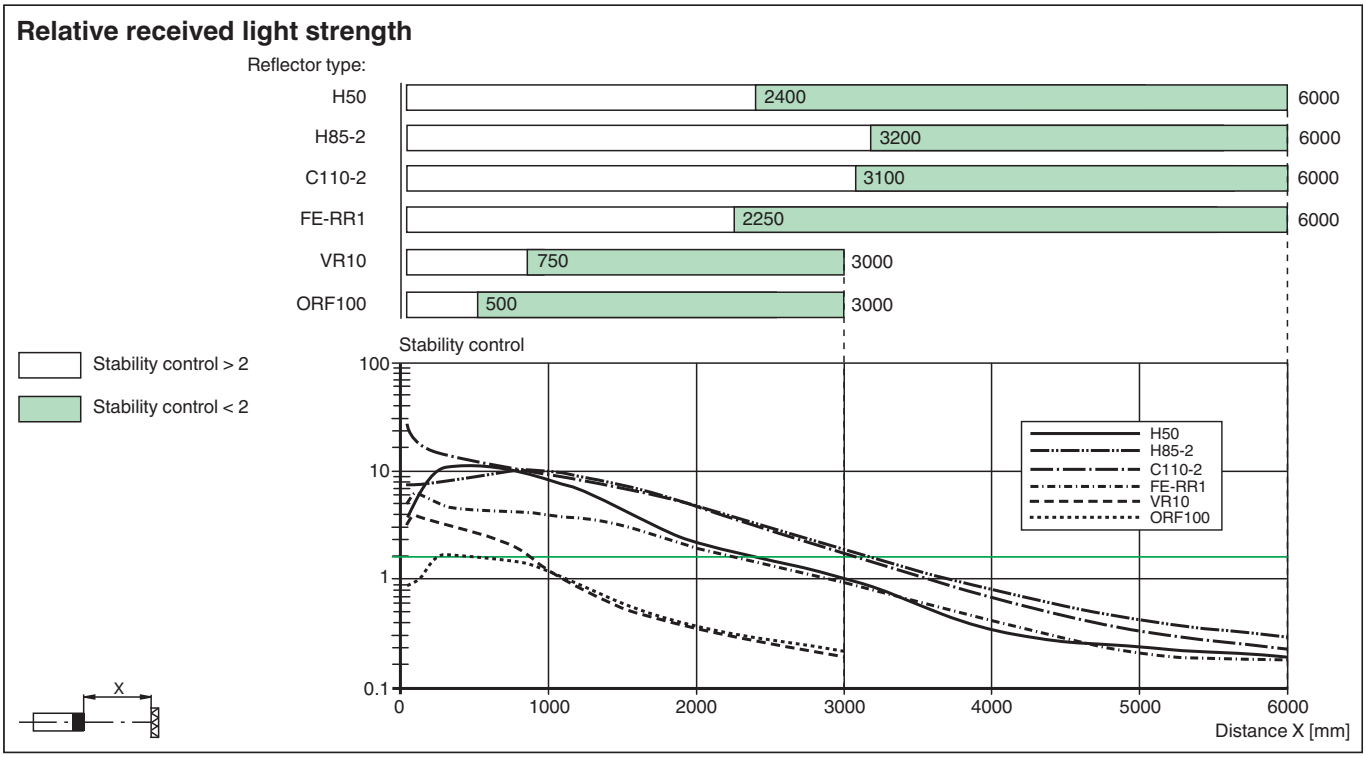

Release date: 2024-08-05 Date of issue: 2024-08-05 Filename: 257819_eng.pdf