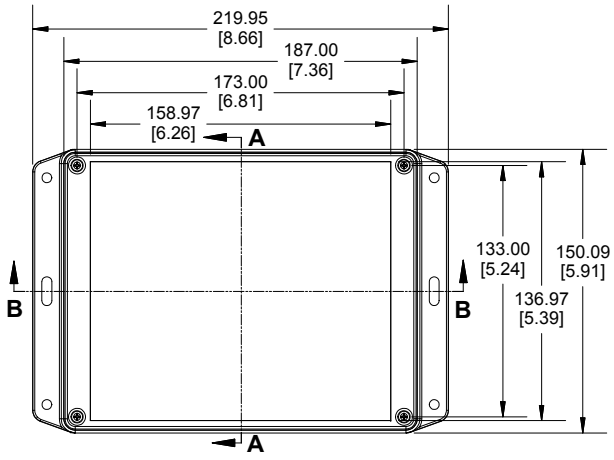

TOP VIEW

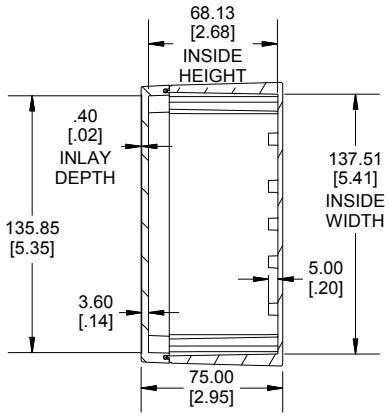

END VIEW
SECTION A-A

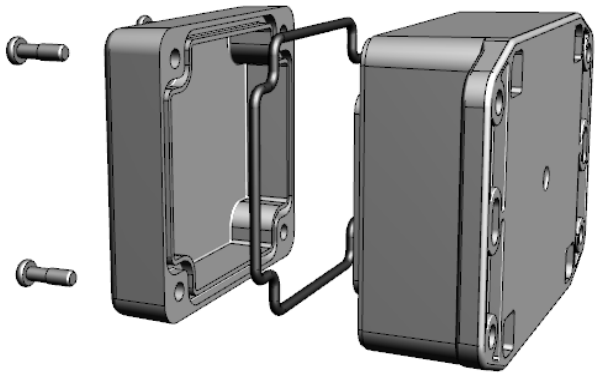

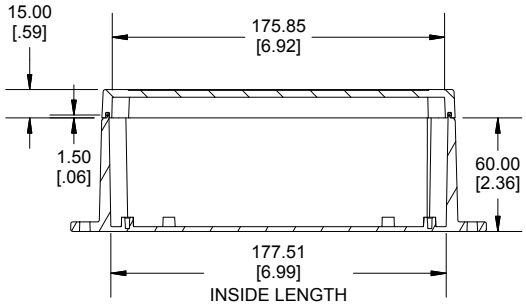

SIDE VIEW
SECTION B-B

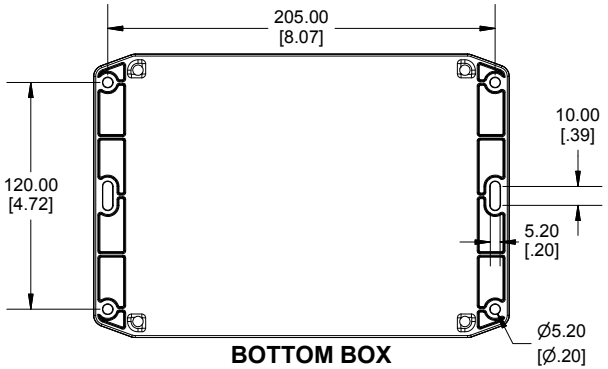

BOTTOM BOX

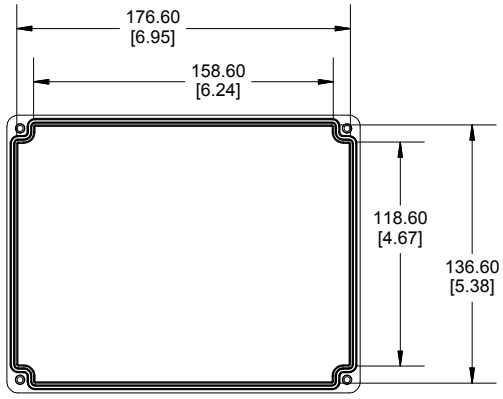

INSIDE LID

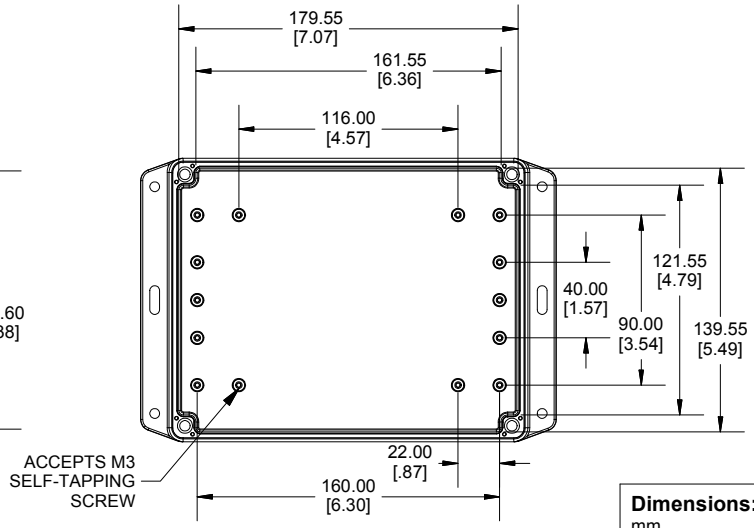

INSIDE BOX

Enclosures can be Factory Modified (Milling, Drilling, Printing etc.)
Contact Factory (modshop@hammondmfg.com) for quotes
Solid models of this enclosure available in .stp or .x_t
(Part number and text placement/orientation on our products are subject to change, we do not recommend using them as a locating reference for modification purposes)

NOTE
Purchased assembly includes box, lid, string gasket, 4 PCB screws, and 4 lid screws.
Recommended Torque : (43-50) Ozf.in / (30-35) cN.m

RP Enclosure	
General Purpose ABS Light Grey (UL94 HB)	RP1285BF
General Purpose ABS Light Grey with Polycarbonate Clear Lid (UL94 HB)	RP1285CBF
Polycarbonate Off-White (UL94-V2)	RP1280BF
Polycarbonate Off-White with Clear Lid (UL94-V2)	RP1280CBF
ACCESSORIES	
Lid Screw (M3.5-0.6 X 10mm) (50 Pkg)	SC619-50
PCB Screw (M3 X 6mm Self-tapping) (50 Pkg)	SC622-50
General Purpose ABS Black Inner Panel 3mm Thick	STC128
Metal Inner Panel 1mm Thick	STA128
String Gasket EPDM Grey (2 Pkg)	RP128GASKET

Dimensions:
mm
[inches]

HAMMOND MANUFACTURING®

RP128 BF

www.hammondmfg.com