Unlocking actuator

Each KL rocker switch includes an unlocking actuator.

This actuator must be pressed to activate the protected function of the rocker. Moreover, two frames protect the unlocking actuator from untimely activation.

This intuitive and secured ergonomics is patented by APEM.

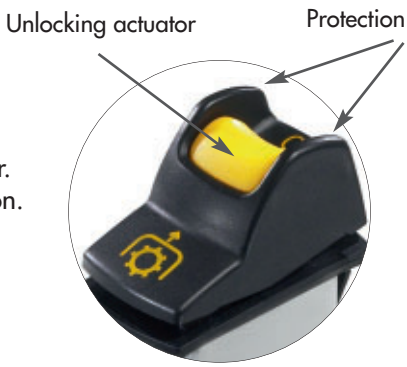

UG1006-A

2 position versions (electrical functions 1, 5 and 6)

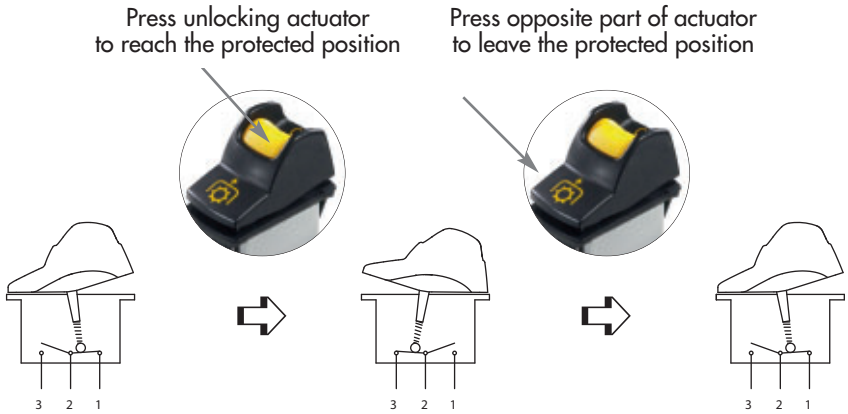

3 position versions (electrical functions 7, 8, 9 4, 4-1R)

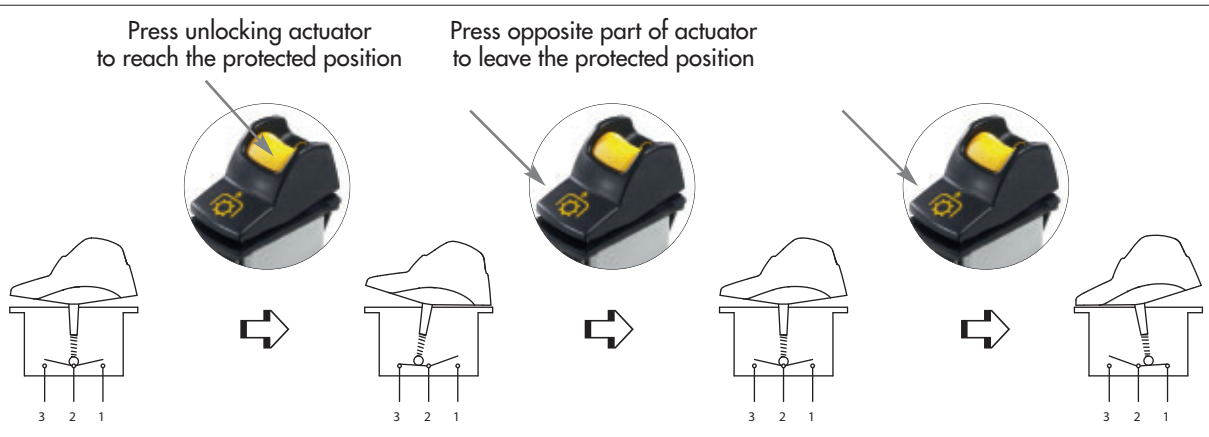

D

KL series

Locking power rocker switches

New!

Specifications



- ❑ **One protected position**
- ❑ **Patented intuitive ergonomics**
- ❑ **Wide choice of colours**
- ❑ **Laser etched symbols**
- ❑ **Illuminated or non-illuminated**
- ❑ **Sealed to IP68**

ELECTRICAL SPECIFICATIONS

- Currrent/voltage rating with resistive load :
  - Silver contacts (A) : 5A 24VDC, 100.000 cycles
  10A 24VDC, 10.000 cycles (terminals 6.35 x 0.8 only)
  - Gold plated contacts (D) : 20mA 12V, 150.000 cycles
- Initial contact resistance : 10 mΩ max.
- Insulation resistance : 1.000 MΩ min. at 500VDC
- Dielectric strength : 2.000 Vrms 50 Hz min. between terminals
- Mechanical life : 150.000 cycles min.

MATERIALS

- Case : PA 6-6
- Actuator and unlocking actuator : ABS
- Bezel : PA 6-6
- Terminals : brass, silver plated
- Contacts : silver (A) or silver, gold plated (D)
- Contact roller : brass, nickel plated

ENVIRONMENTAL SPECIFICATIONS

- Degree of protection of sealed versions : frontal sealing to IP68 according to IEC 60529 (submersion under 1 meter of water for more than 30 minutes)
- Salt spray resistance : 96 hours according to IEC 512-6, test 11f
- Operating temperature : -40°C to +85°C

SEALING

Sealing is optional.

To order a sealed product, complete the appropriate box of ordering format on the following pages.

DIMENSIONS

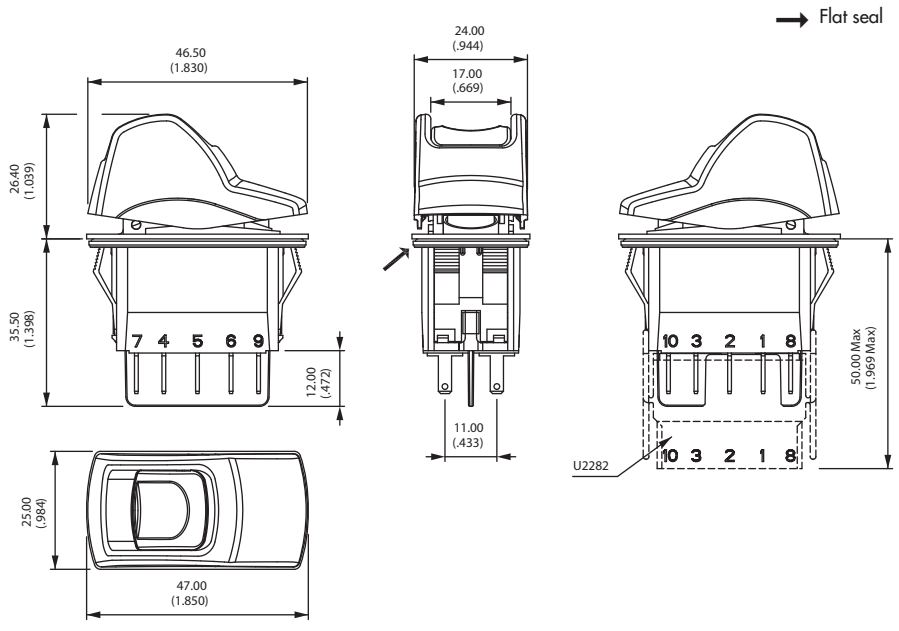

Packaging unit : 40 pieces

Dimensions : First dimensions are in mm while inches are shown as bracketed numbers.

KL series

Locking power rocker switches

Selection guide

New!

• To order a complete product, fill in all the boxes of the following order guide.

CASE + LEDS

KL | | | | | | Side B | |

SERIES

Poles

3	Single pole
4	Double pole

Electrical functions

1	ON	-	OFF
4	ON	ON	ON
4-1R	ON	ON	MOM
5	MOM	-	ON
6	ON	-	ON
7	MOM	OFF	MOM
8	ON	OFF	MOM
9	ON	OFF	ON

Function 1 only for 6-terminal versions.
Functions 5 and 6 cannot be combined with "H" wiring.

Terminals

Screw
0 6 terminals with barrier
Solder lug/quick-connect
2 6 terminals with barrier
4 6 terminals w/o barrier
A 10 term. with barrier
B 10 term. w/o barrier
C 10 terminals for use with connector U2292
Quick-connect 6,35x0,8
3 6 terminals with barrier

Terminals (continued)

Quick-connect 6,35x0,8
5 6 terminals w/o barrier
D 10 term. with barrier
E 10 term. w/o barrier
F 10 term. for use with connector U2292
Quick-connect 2,8x0,8
G 10 term. with barrier
H 10 term. w/o barrier
J 10 terminals for use with connector U2282

Contacts

A	Silver
D	Gold plated

Sealing

X	No
K	Yes

LEDS

X	None
A	LED 6V red
B	LED 6V green
C	LED 6V yellow
M	LED 6V blue
R	LED 6V white
D	LED 12V red
E	LED 12V green
F	LED 12V yellow
N	LED 12V blue
S	LED 12V white
J	LED 24V red
K	LED 24V green
L	LED 24V yellow
P	LED 24V blue
T	LED 24V white

Wiring

See following pages.

ACTUATOR

Type

1	For non-illum. application
2	For illuminated application

Rocker colour

1	Blue
1/4	Dark blue
2	Black
3	Green
4	Grey
5	Yellow
6	Red
7	Ivory
9	Orange

Unlocking actuator colour

1	Blue
1/4	Dark blue
2	Black
3	Green
4	Grey
5	Yellow
6	Red
7	Ivory
9	Orange

ACTUATOR MARKING

	Area A	Area B	

Orientation

N

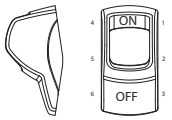

Symbols

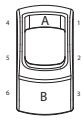

Symbols & Accessories : see end of section D.

Marking colour

Illuminated models
Blank White
Non-illuminated

1	Blue
2	Black
3	Green
4	Grey
5	Yellow
6	Red
7	White
9	Orange

NOTICE : please note that not all combinations of above numbers are available. Refer to the following pages for further information.

D

KL series

Locking power rocker switches

New!

Case

MODEL STRUCTURE

CASE + LEDS

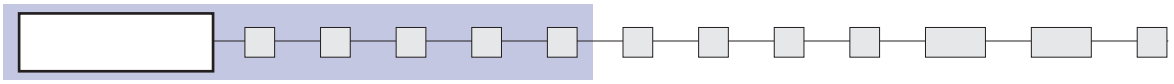



		2-3 / 5-6		1-2 / 4-5
Single pole	Double pole			
KL31	**KL41**	ON	-	OFF
	KL44*	ON	ON	ON
	KL44-1R*	ON	ON	MOM
KL35	**KL45**	MOM	-	ON
KL36	**KL46**	ON	-	ON
KL37	**KL47**	MOM	OFF	MOM
KL38	**KL48**	ON	OFF	MOM
KL39	**KL49**	ON	OFF	ON

* Function 4 : single pole in double pole case

Bottom view

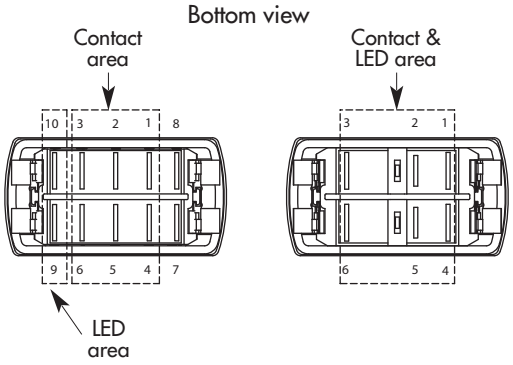

10 terminal version

6 terminal version

ELECTRICAL FUNCTIONS AND CONNECTIONS

In the tables below, terminal connections as viewed from bottom of switch. Only the contact area is represented. For single pole models, only terminals 1, 2 and 3 are to be considered (not 6, 5, 4).

x = w/o terminal
o = with terminal
▲ = momentary

	2 positions		
	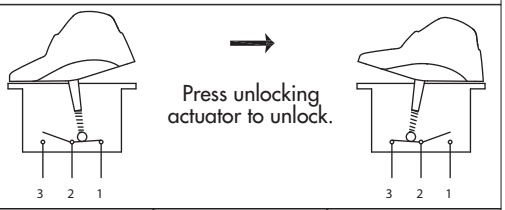		
Function 1 * KL31-KL41			
Functionn 5 KL35 - KL45			
Function 6 KL36-KL46			

	3 positions		
	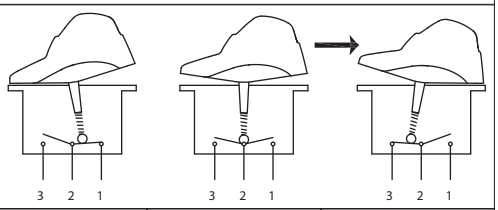		
Function 7 KL37-KL47		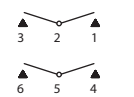	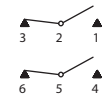
Function 8 KL38-KL48			
Function 9 KL39-KL49		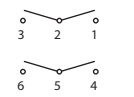	
Function 4 KL44			
Function 4-1R KL44-1R			

*** Function 1**
- Only available for 6 terminal versions.
- Illuminated versions only available with "A" wiring.

New!

TERMINALS

CASE + LEDS

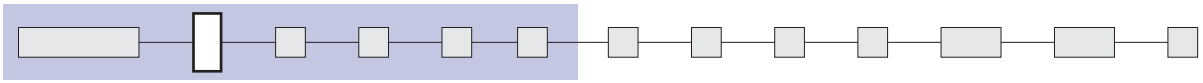

Screw

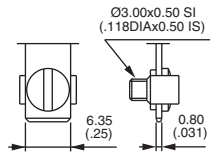

0 6 term. with barrier

Solder lug / quick-connect

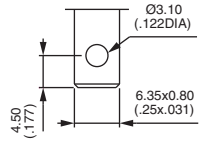

2 6 terminals with barrier
4 6 terminals w/o barrier

A 10 terminals with barrier
B 10 terminals w/o barrier
C 10 terminals for use with connector U2292

Normalized quick-connect 6,35x0,8

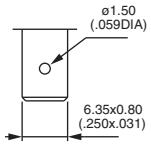

3 6 terminals with barrier
5 6 terminals w/o barrier

D 10 terminals with barrier
E 10 terminals w/o barrier
F 10 terminals for use with connector U2292

Normalized quick-connect 2,8x0,8

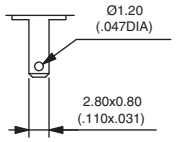

G 10 terminals with barrier
H 10 terminals w/o barrier
J 10 terminals for use with connector U2282

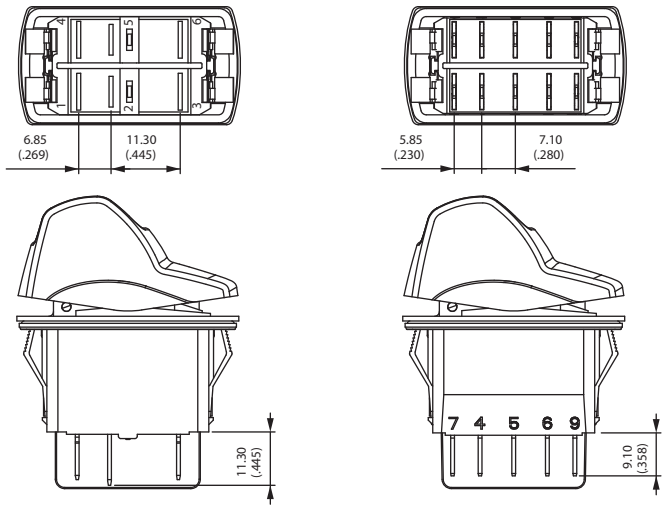

6 terminal version — 10 terminal version

Terminals are marked on the case.

The drawings show the maximum possible number of terminals.

CONTACT MATERIALS

CASE + LEDS

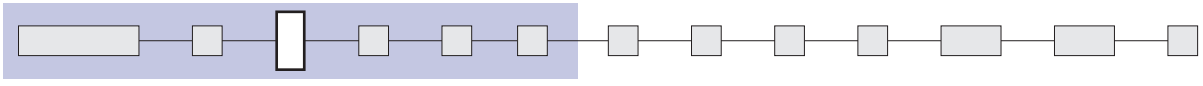

A Silver
D Silver, gold plated

KL series

Locking power rocker switches

New!

Case - LEDs

SEALING

CASE + LEDS

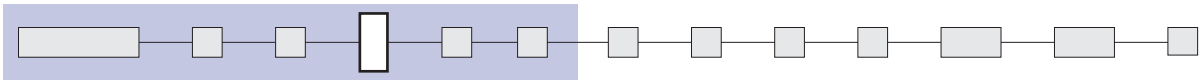

X No sealing

K IP68 (switch assembled on panel)

Ultrasonic welding of frame to case is standard on all versions.
The ultrasonic welding and the optional panel seal prevent water and dust from introducing into the switch housing.

The product shall be installed professionally.
Test conditions available on request.

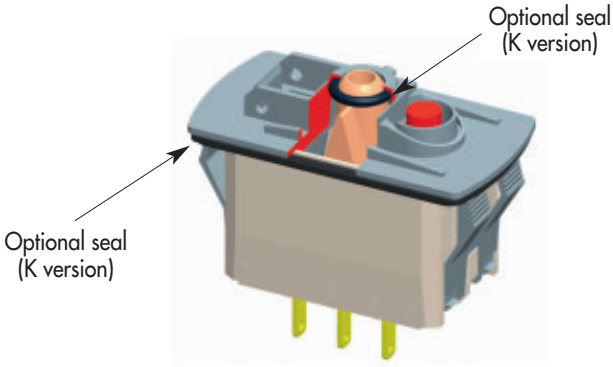

LEDS

CASE + LEDS

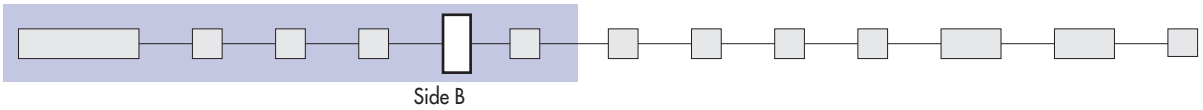

Complete enlarged box with one of the codes listed below.

X Without LED

	Red	Green	Yellow	Blue	White
6VDC	**A**	**B**	**C**	**M**	**R**
12VDC	**D**	**E**	**F**	**N**	**S**
24VDC	**J**	**K**	**L**	**P**	**T**

LED consumption : 20mA @ nominal voltage (25°C)

Other illumination solutions : on request.

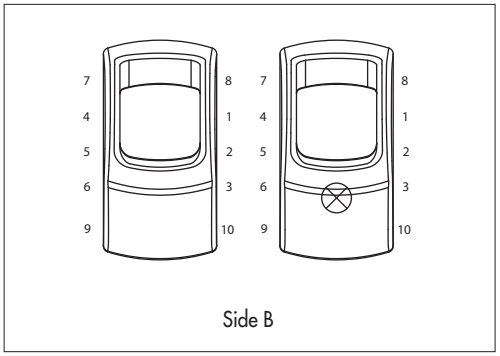

WIRING

The LED wiring diagram is shown on the case.

CASE + LED

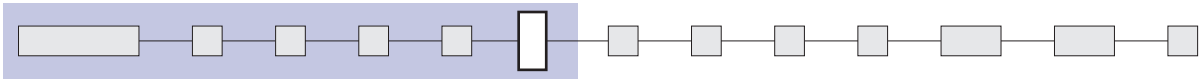

- **For 6 terminal versions** LED connected to the load

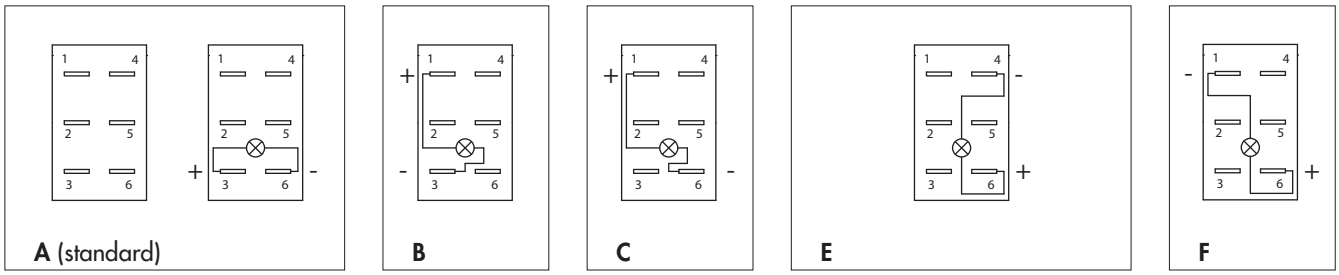

Note : If not available, terminals are added to connect the LED.

- **For 10 terminal versions** Independent LED or integrated functions

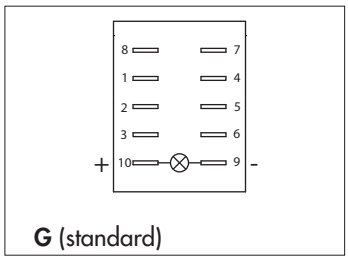

To have independent LED.

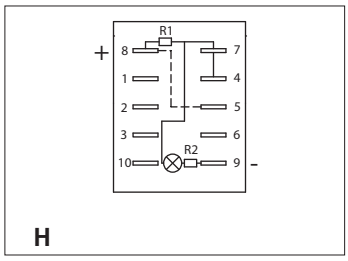

To obtain 2 symbol illumination levels (night illumination when OFF and higher illumination when ON).
Dotted line = external wiring, continuous line = internal wiring

Available in Single Pole only, with H and J quick-connect terminals.

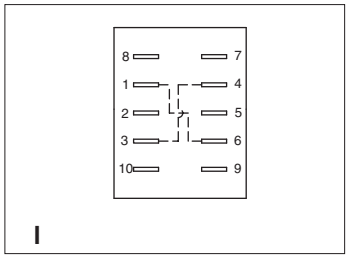

To have a polarity inversion (typical application : fan motor).
Dotted line = external wiring

Power supply betweeen 2 and 5 - Load between 1 and 4 or 3 and 6.
Available with H and J quick-connect terminals.

Please contact us for other wiring solutions.

KL series

Locking power rocker switches

New!

Actuator - Marking

ACTUATOR TYPE

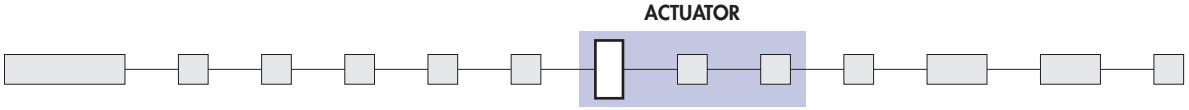

1 For non-illuminated application
2 For illuminated application

ROCKER COLOUR

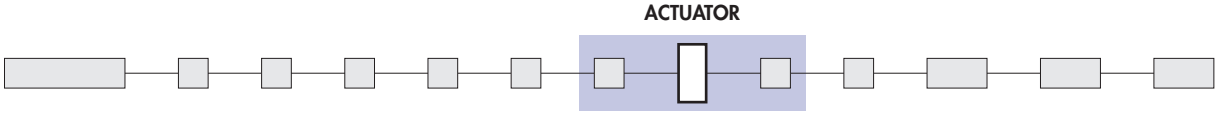

Code	Colour
1	Blue
1/4	Dark blue
2	Black

Code	Colour
3	Green
4	Grey
5	Yellow

Code	Colour
6	Red
7	Ivory
9	Orange

Note : colour 7 not available on illuminated versions

UNLOCKING ACTUATOR COLOUR

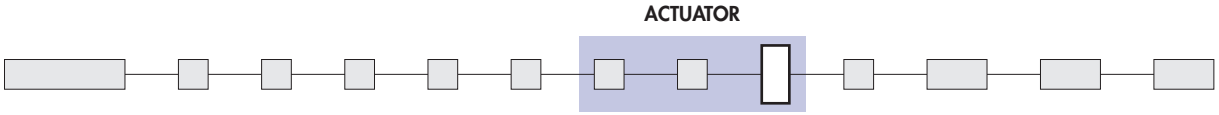

Code	Colour
1	Blue
1/4	Dark blue
2	Black

Code	Colour
3	Green
4	Grey
5	Yellow

Code	Colour
6	Red
7	Ivory
9	Orange

MARKING ORIENTATION

If no marking required, leave box blank.

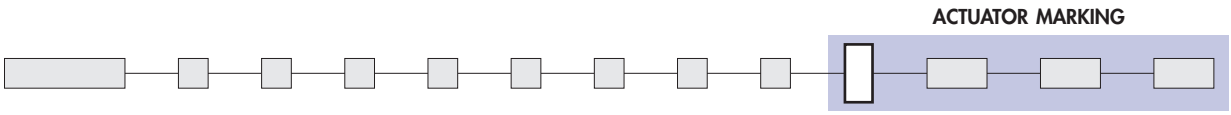

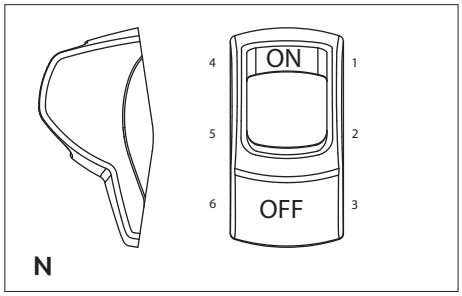

N

Other orientations : on request

SYMBOLS

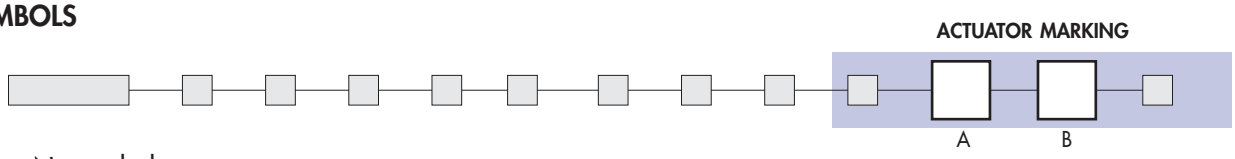

XX No symbol

Available symbols : see end of section D.

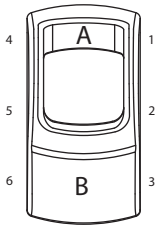

Laser etching resistance
- Water and petrol resistant acccording to EN61058-1
- Tear resistant (cross-cut test) according to NF ISO 2409 : class 0
- UV resistant according to ISO 4892-2

Marking area - The symbol will be included in the hatched area.

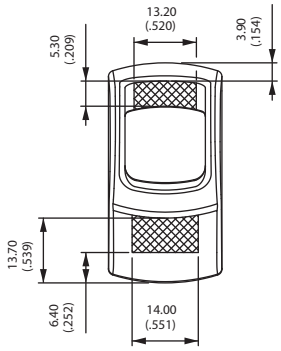

For illuminated versions

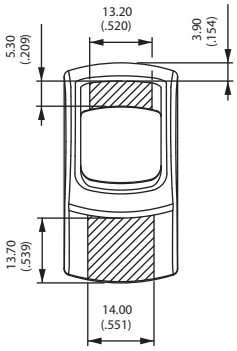

For non-illuminated versions

MARKING COLOUR

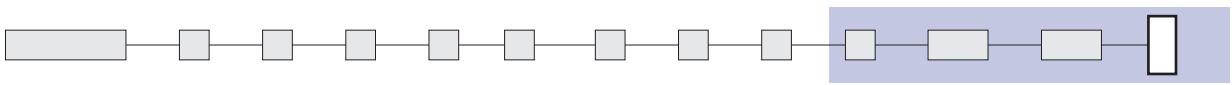

Illuminated models (laser etching)
Blank White

Non-illuminated models (pad printing)
1 : Blue - **2** : Black - **3** : Green - **4** : Grey - **5** : Yellow - **6** : Red - **7** : White - **9** : Orange

SWITCH PANEL CUT-OUT

Panel thickness : 0,8 mm to 4,6 mm

Recommended panel thickness : between 2 mm and 3,5 mm

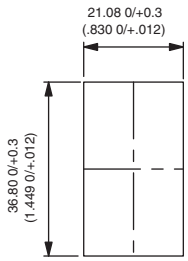

MATRIX MOUNTING

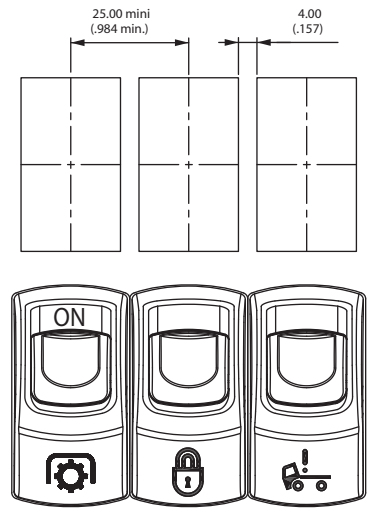

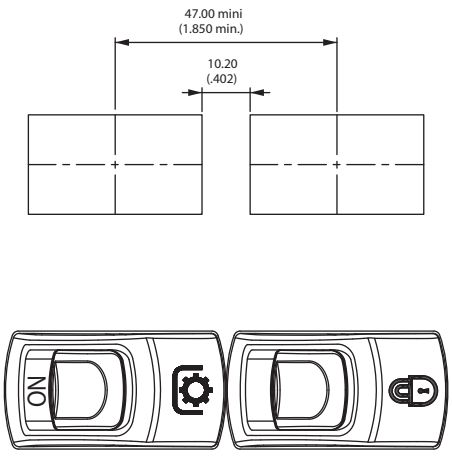

K range

Power rocker switches and indicators

Symbols

Most symbols meet the ISO 7000 standard "graphical symbols for use on equipments" (code given in bracket in the description). Contact us for symbols not featured in the following tables.

UG1006-A

Legend scale :
KR series : 1:1
KL, KG and KI series : depending on space available on the product (see "Symbols" section at the end of each series).

CODE	SYMBOL	DESCRIPTION
XX	None	-
01	ON	-
02	OFF	-
03	O	-
04	I	-
05	II	-
06	STOP	-
07	A	Stop
08	M	Motion
09		Up motion
10		Down motion
11		Hot
12		Cold
13		Hazard warning (0085)
14		Traveller lighting
15		Driver lighting (1421

CODE	SYMBOL	DESCRIPTION
16		Revolving light
17		Rear ventilator
18		Heating (0637)
19		Door opening
20		Windshield demister/defroster (0635)
21		Windshield wiper (0086)
22		Windshield washer (0088)
23		Ventilator fan (0089)
24		Side mirror defroster
25		Restarting pump
26		Front fog lights (0633)
27		Rear fog lights (0634)
28		Propulsion system trim
29		Beacon (1141)
30		Anchor
31		Electric motor (0011)

CODE	SYMBOL	DESCRIPTION
32		Emergency first aid vehicle (2565)
33		Load tipping (1557)
34		Loading light (2457)
35		Tractor, rear-ward (1667)
36		Combine, direction of movement (1678)
37		Use no forks (2406)
38		Transmission (1166)
39		Working spot light (1145)
40		Engine (0640)
41		Horn (0244)
42		Lock (1656)
43		Taxi sign light (2551)
44		Working light (1204)
45		Working light symmetric (1204)
46		-
47	ASM	-

Most symbols meet the ISO 7000 standard "graphical symbols for use on equipments" (code given in bracket in the description). Contact us for symbols not featured in the following tables.

Legend scale :
KR series : 1:1
KL, KG and KI series : depending on space available on the product (see "Symbols" section at the end of each series).

CODE	SYMBOL	DESCRIPTION
48		All wheel drive
49		Differential lock (1662)
50		-
51		-
52		-
53	N	-
54		Rear window wiper (0097)
55		Rear window washer (0099)
56		Lower load (2223)
57		Cab lock (1560)
58		Extraction
59		Pumping in
60		Rear PTO (1572)
61		Front PTO
62		Rockshaft down
63		Rockshaft up

CODE	SYMBOL	DESCRIPTION
64		Indicator
65		Brake release
66		Baggage room left door
67		Baggage room right door
68		Power blinds
69		Engine idle control
70	CRUISE RES/SET	Cruise res/set
71		Driver windows up/down
72		Middle door opening
73		Front door opening
74		Lighting in baggage room
75	CRUISE ON/OFF	Cruise on/off
76	TV	TV
77		Pump
78	WC	Toilet
79	WC	Toilet decontamination

CODE	SYMBOL	DESCRIPTION
80		Front windshield heating
81	AUS	Aus
82		Radiator fan
83		Remove retarder
84		Restricted speed
85		Preheater
86		ABS detection
87		ECAS detection
88		Engine stop
89	CRUISE RES/CAN	Cruise res/cancel
90		ECAS reset
91		Driver windows heating
92	CRUISE SET+/SET-	Cruise set
93		Air bag up/down
94		Read lighting
95		Lighting main switch

D

K range

Power rocker switches and indicators

Symbols

Most symbols meet the ISO 7000 standard "graphical symbols for use on equipments" (code given in bracket in the description). Contact us for symbols not featured in the following tables.

Legend scale :
KR series : 1:1
KL, KG and KI series : depending on space available on the product (see "Symbols" section at the end of each series).

CODE	SYMBOL	DESCRIPTION
96		Heating using water
97		Low beam
98		Position lights
99		Diesel acceleration
A1		Manual mode
A2		Clockwise cabin rotation
A3		Anticlockwise cabin rotation
A4		-
A5		-
A6		Parking brake
A7		-
A8		-
A9		-
AA		-
AB		-
AC		-

CODE	SYMBOL	DESCRIPTION
AD		-
AE		-
AF		-
AG		Battery charging condition (0247)
AH		Turn signals (0084)
AJ		High beam (0082)
AK		Differential lock, bogie (2600)
AL		Brushing with a rotating brush (0070)
AM		Differential lock, transfer case 4x4 (2475)
AN		Loader bucket, float (1441)
AP		Loader bucket (1437)
AQ		Rear window washer & wiper (0098)
AR		Header Header drive (1579)
AS		Excavator/backhoe boom side shift (2091)
AT		Chemical water treatment (1851)
AU		Grapple skidder, single funct° boom (1762)

CODE	SYMBOL	DESCRIPTION
AV		-
AW		-
AY		-
AZ		-
B1	HIGH	-
B2	LOW	-
B3		-

MOUNTING PANEL END



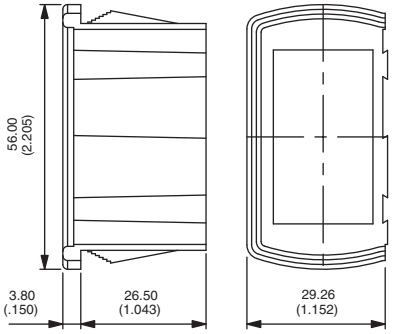

U2261

MOUNTING PANEL MIDDLE



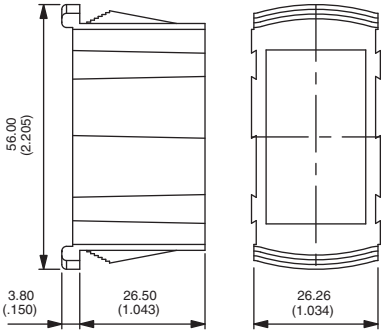

U2262

SINGLE MOUNTING PANEL



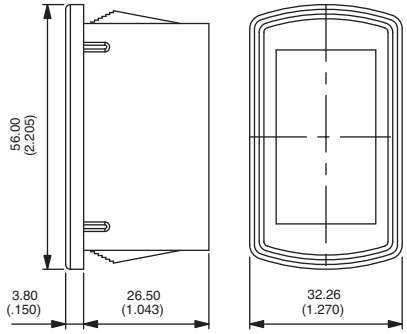

U2267

Recommended panel thickness : 1,10 mm - 1,80 mm - 2,60 mm - 3,40 mm - 4,20 mm - 5 mm - 5,80 mm

MOUNTING PANEL CUT-OUT

For additional elements, add 26,40 mm (1.039)

For 1 element U2267

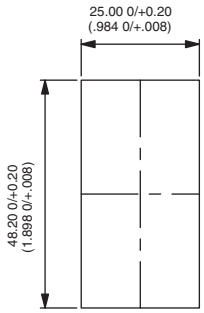

For 2 elements U2261

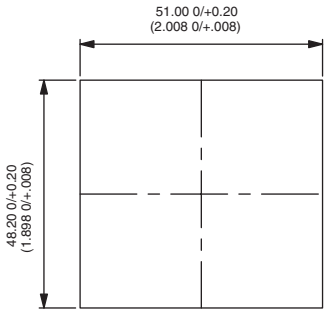

For 3 elements (2xU2261 + 1x U2262)

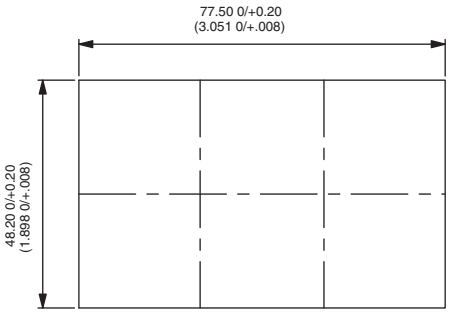

22 x 44 ADAPTER

Front panel mounting

New!

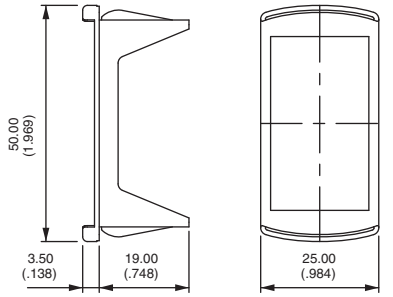

U3060

Recommended panel thickness : 0,60 mm to 1,50 mm

22 x 44 ADAPTER

Rear panel mounting

New!

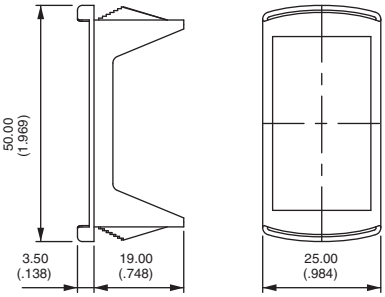

U3070

Recommended panel thickness : 1,60 mm -0,1/0 to 5,60 mm -0,1/0 in stages of 0,40 mm

PANEL CUT-OUT

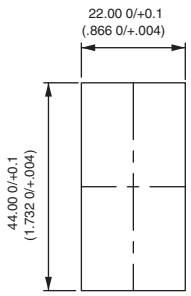

Adapter colours (replace 0 with code)
1/4 : dark blue - **2** : black - **4** : grey
5 : yellow - **6** : red - **7/1** : white

D

K range

Power rocker switches and indicators

Accessories for KR, KL and KI series

ACTUATOR REMOVING TOOL



U3052

2 tools are supplied

EXTRACT ACTUATOR (KR ONLY)
Allows the extraction of the rocker / rocker support assembly.
Place the 2 claws under the support and push as indicated by the arrow.

EXTRACT ROCKER (KR ONLY)
Allows to separate the rocker from its support.
Insert the tool between rocker and support as indicated by the arrrow. Pull out the tool in the opposite direction.

EXTRACT SWITCH (KR, KL AND KI)
Allows to extract switch from panel mounting units. 2 tools are necessary.
Insert the tools between switch and panel mounting units from the rear to compress the snap-in device. Pull off switch manually.

CONNECTORS

Standard colour : black. Other colours : on request.
Connectors cannot be combined with wiring types H and I.

D

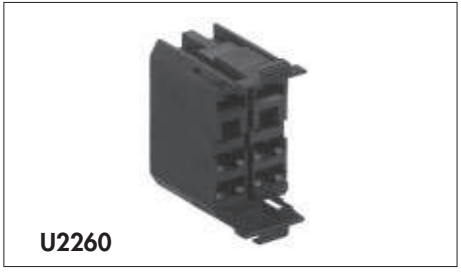

U2260

6 terminal version
For use with terminals type 2, 3, 4 or 5.
6,35 (1/4) tabs to be fitted by the user (example : AMP/Tyco 0-0141013-2).
Can be used for the KG series.

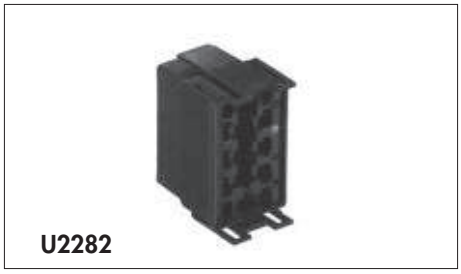

U2282

10 terminal version
For use with terminals type H or J.
2,8 (.110) tabs to be fitted by the user (example : AMP/Tyco 0-927779-3).

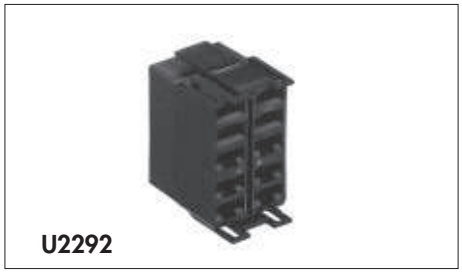

U2292

10 terminal version
For use with terminals type B, C, E or F.
6,35 (1/4) tabs to be fitted by the user (example : AMP/Tyco 0-0141013-2).

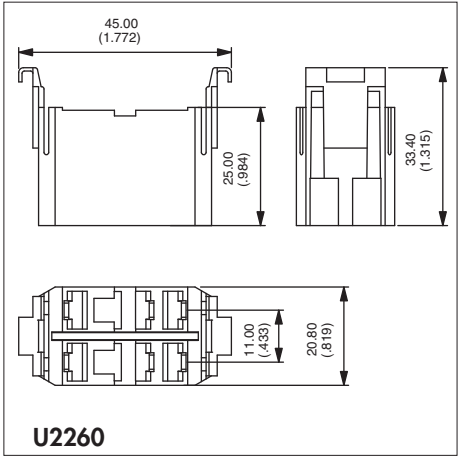

U2260

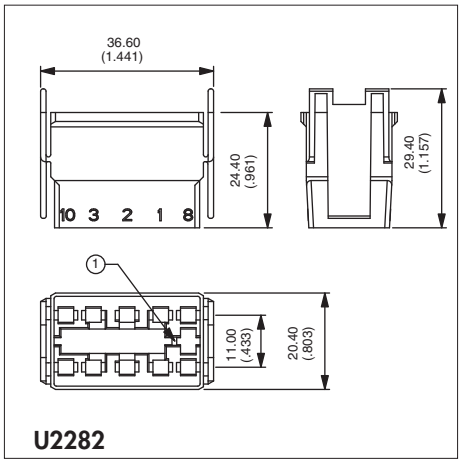

U2282

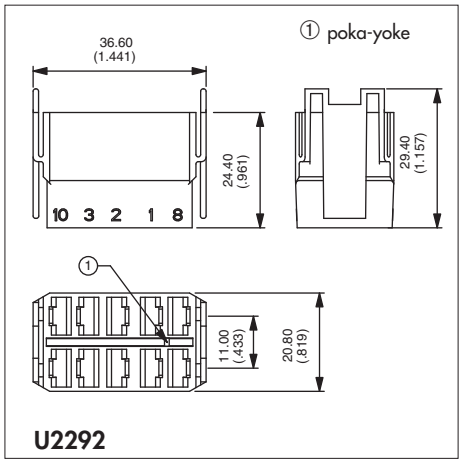

U2292

HOLE PLUGS

Usefull for future extensions.

Code	Colour
U2271	Blue
U2271/4	Dark blue
U2272	Black
U2273	Green

Code	Colour
U2274	Grey
U2275	Yellow
U2276	Red
U2277	Ivory
U2279	Orange

Recommended panel thickness :
1,50 mm to 6 mm

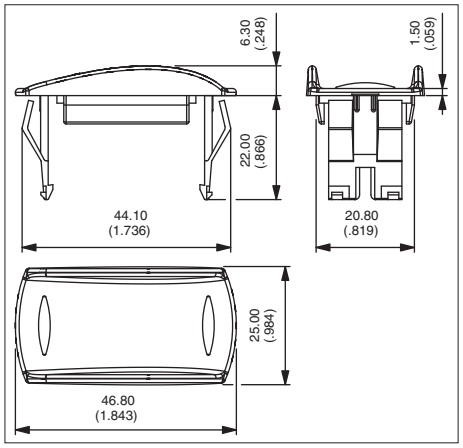



Connectors can be hanged on specific hole plugs. Contact APEM.

D