Rittal – The System.

Faster – better – everywhere.

CMC III Temperature/Humidity Sensor



DK 7030.111

Assembly and operating instructions

ENCLOSURES | POWER DISTRIBUTION | CLIMATE CONTROL | IT INFRASTRUCTURE | SOFTWARE & SERVICES

FRIEDHELM LOH GROUP

EN

Foreword

Dear Customer,

Thank you for choosing our CMC III temperature/humidity sensor (referred to hereafter as "temperature/humidity sensor")!

We wish you every success.

Yours
Rittal GmbH & Co. KG

Rittal GmbH & Co. KG
Auf dem Stuetzelberg

35745 Herborn
Germany

Tel.: +49(0)2772 505-0
Fax: +49(0)2772 505-2319

E-mail: info@rittal.com
www.rittal.com
www.rittal.de

We are always happy to answer any technical questions regarding our entire range of products.

EN

Contents

1 Notes on documentation 4
1.1 CE labelling 4
1.2 Storing the documents 4
1.3 Symbols used in these operating instructions 4
1.4 Associated documents 4

2 Safety instructions 5
2.1 General safety instructions 5
2.2 Service and technical staff 5

3 Product description 6
3.1 Function description and components 6
3.1.1 Function 6
3.1.2 Components 6
3.2 Proper use, foreseeable misuse 6
3.3 Scope of supply 6

4 Transport and handling 7
4.1 Transport 7
4.2 Unpacking 7

5 Installation 8
5.1 Safety instructions 8
5.2 Siting location requirements 8
5.3 Installation procedure 8
5.3.1 Installation notes 8
5.3.2 Installation with the provided bracket on the enclosure frame 8
5.3.3 Installation with the provided bracket on a system chassis 9
5.3.4 Installation on a top-hat rail 9
5.4 Connecting the sensor 10

6 Operation 11
6.1 Activating the temperature/humidity sensor . 11
6.2 Operating and display elements 11
6.3 LED displays 11
6.3.1 Multi-LED displays 11
6.3.2 LED displays on the CAN bus connection 11
6.4 Operating the CMC III Processing Unit from the website 11
6.4.1 Device 11
6.4.2 Temperature 12
6.4.3 Humidity 12

7 Storage and disposal 13
7.1 Storage 13
7.2 Disposal 13

8 Technical specifications 14

9 Customer service addresses 15

EN

1 Notes on documentation

1.1 CE labelling

Rittal GmbH & Co. KG hereby confirms that the CMC III temperature/humidity sensor is compliant with the EU EMC Directive 2014/30/EU. An appropriate declaration of conformity has been prepared. It can be provided on request.

CE

1.2 Storing the documents

The operating, installation and maintenance instructions as well as all applicable documents are an integral part of the product. They must be passed to those persons who are engaged with the unit and must always be available and on hand for the operating and maintenance personnel.

1.3 Symbols used in these operating instructions

The following symbols are used in this documentation:



Danger!
A dangerous situation in which failure to comply with the instructions causes death or severe injury.



Warning!
A hazardous situation which may lead to death or serious injury if the instructions are not followed.



Caution!
A hazardous situation which may lead to (minor) injuries if the instructions are not followed.



Note:
Identification of situations that can lead to material damage.

■ This symbol indicates an "action point" and shows that you should perform an operation or procedure.

1.4 Associated documents

– Installation and Short User's Guide
– CMC III Processing Unit/CMC III Processing Unit Compact assembly and operating instructions

EN

2 Safety instructions

2.1 General safety instructions

Please observe the subsequent general safety instructions for the installation and operation of the system:

– Use only original Rittal products or products recommended by Rittal in conjunction with the temperature/humidity sensor.
– Please do not make any changes to the temperature/humidity sensor that are not described in this manual or in the associated manuals.
– The operational safety of the temperature/humidity sensor is guaranteed only for its approved use. The technical specifications and limit values stated may not be exceeded under any circumstances. In particular, this applies to the specified ambient temperature range and IP degree of protection.
– The temperature/humidity sensor may not be opened. The unit does not contain any parts that need servicing.
– Operating the system in direct contact with water, aggressive materials or inflammable gases and vapours is prohibited.
– Other than these general safety instructions, ensure you also observe the specific safety instructions when the tasks described in the following chapters are performed.

2.2 Service and technical staff

– The mounting, installation, commissioning, maintenance and repair of this unit may only be performed by qualified mechanical and electro-technical trained personnel.
– Only properly instructed personnel may work on a unit while in operation.

EN

3 Product description

3.1 Function description and components

3.1.1 Function

The temperature/humidity sensor serves to measure the temperature and relative humidity at the installation location. It provides the temperature and air humidity values measured to the connected CMC III Processing Unit. The temperature/humidity sensor has an identification that allows it to be detected automatically by the CMC III Processing Unit.

Note:
In the following text the designation "CMC III Processing Unit" refers to both the "CMC III Processing Unit" and also the "CMC III Processing Unit Compact". All of the text passages which only apply for one of the two variants are labelled accordingly.

3.1.2 Components

The device consists of a compact plastic housing in RAL 7035 with a ventilated front in RAL 9005.

3.2 Proper use, foreseeable misuse

The temperature/humidity sensor serves exclusively to measure the temperature and relative humidity in a server enclosure. It may only be used together with the CMC III Processing Unit. Any other use is not permitted.

3.3 Scope of supply

– CMC III temperature/humidity sensor
– Accessories provided (fig. 1)
– Installation and Short User's Guide

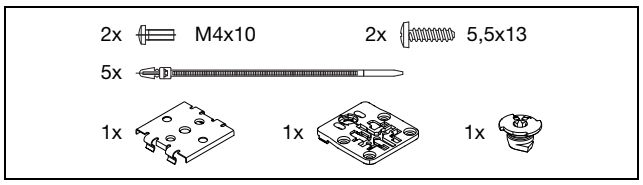

Fig. 1: Accessories provided

EN

4 Transport and handling

4.1 Transport

The unit is delivered in a carton.

4.2 Unpacking

- Remove the unit's packaging materials.



Note:
After unpacking, the packaging materials must be disposed of in an environmentally friendly way. It consists of the following materials:
Polyethylene film (PE film), cardboard.

- Check the unit for any damage that occurred during transport.



Note:
Damage and other faults, e.g. incomplete delivery, should immediately be reported to the shipping company and to Rittal GmbH & Co. KG in writing.

- Remove the unit from the PE film.
- Remove the protective film from the front cover of the device.

EN

5 Installation

5.1 Safety instructions

- Please observe the valid regulations for installation in the country in which the temperature/humidity sensor is installed and operated, and the national regulations for accident prevention. Please also observe any company-internal regulations, such as work, operating and safety regulations.
- The technical specifications and limit values stated must not be exceeded under any circumstances. In particular, this applies to the specified ambient temperature range and IP degree of protection.
- If a higher IP protection class is required for a special application, the temperature/humidity sensor must be installed in an appropriate housing or in an appropriate enclosure with the required IP degree of protection.

5.2 Siting location requirements

To ensure the correct function of the unit, the conditions for the installation site of the unit specified in section 8 "Technical specifications" must be observed.

Electromagnetic interference

– Interfering electrical installations (high frequency) should be avoided.

5.3 Installation procedure

There are generally several options for installing the temperature/humidity sensor:

1. Installation on the frame of the enclosure or IT enclosure using the bracket included.
2. Installation with the provided bracket on a system chassis.
3. Installation on a top-hat rail using the bracket included along with a spring clip.

5.3.1 Installation notes

- Precise temperature measurement with the internal sensor requires adequate air circulation inside the enclosure or the IT enclosure. In addition, the temperature/humidity sensor must be positioned so that it is ventilated with an adequate amount of air and the ventilation slots are not covered.

5.3.2 Installation with the provided bracket on the enclosure frame

The provided bracket is used for installation on the frame of an IT enclosure.

- For installation on a TS IT enclosure, break off the protruding lugs at the rear of the bracket.

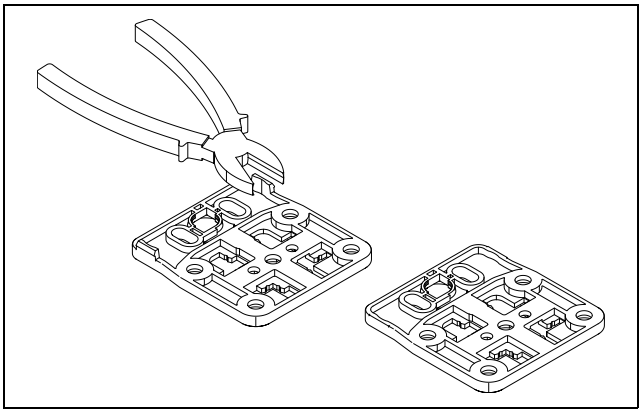

Fig. 2: Preparing the bracket for installation on a TS IT enclosure

- Place the temperature/humidity sensor on the bracket from above.

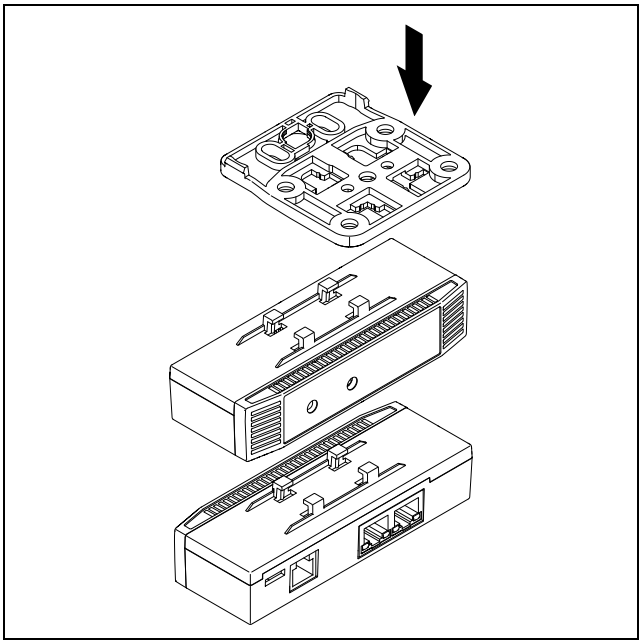

Fig. 3: Attaching the sensor to the bracket

- Move the sensor sideways slightly on the bracket so that it latches into place.

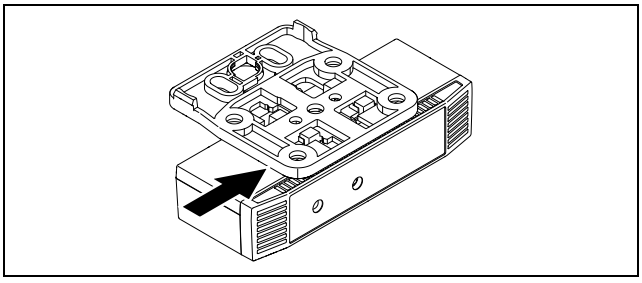

Fig. 4: Latching the sensor into place on the bracket

- Fasten the bracket, including temperature/humidity sensor, at the desired position in the enclosure or the IT enclosure by making a quarter-turn of the connector.

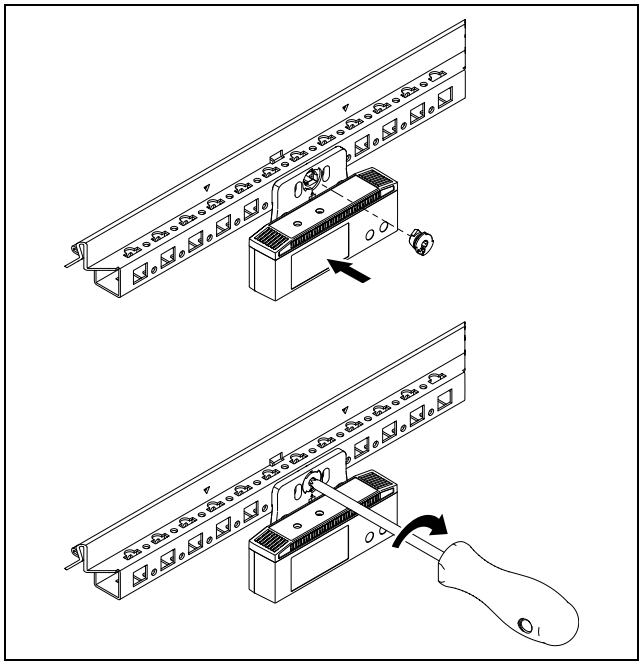

Fig. 5: Mounting the sensor in the enclosure or IT enclosure

- Optionally secure the bracket using the two screws included in the scope of delivery.

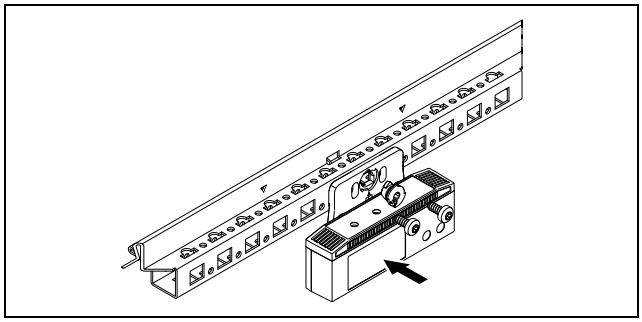

Fig. 6: Optional securing of the bracket

5.3.3 Installation with the provided bracket on a system chassis

The provided bracket is used for installation on a system chassis.

- Place the temperature/humidity sensor on the bracket from above and latch it similar to the installation on the enclosure frame.
- Fasten the bracket, including temperature/humidity sensor, at the desired position in the enclosure on the system chassis by making a quarter-turn of the connector.

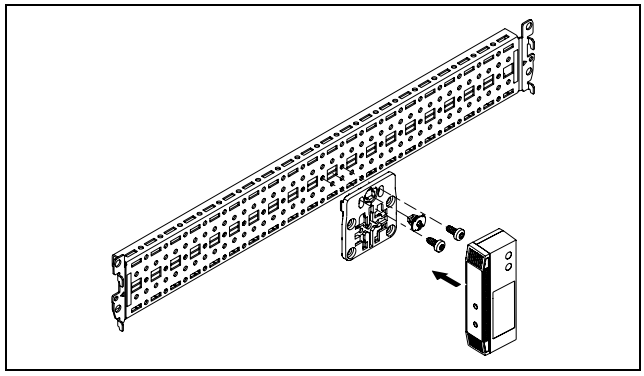

Fig. 7: Fastening the sensor to a system chassis

- Also **always** secure the bracket with the two provided bolts.

5.3.4 Installation on a top-hat rail

The sensor can also be mounted on a top-hat rail using the bracket along with the spring clip included in the scope of delivery.

- First screw the bracket onto the spring clip provided for installation on a top-hat rail.
- Then place the temperature/humidity sensor on the bracket and latch it into place.

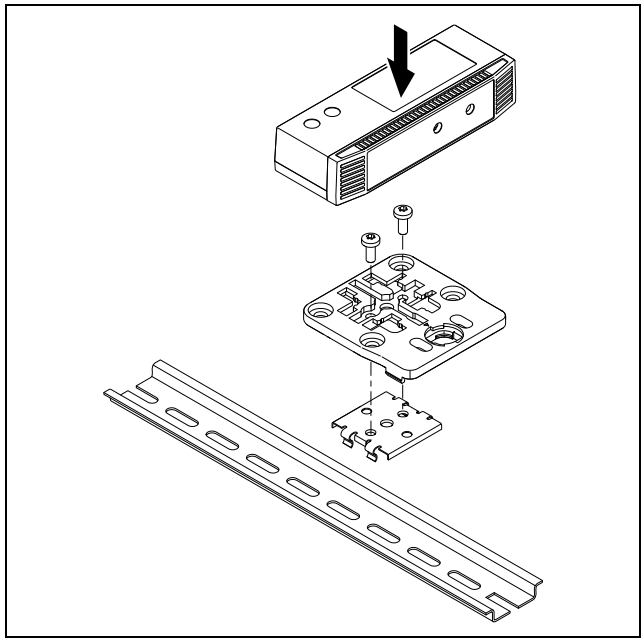

Fig. 8: Fastening the bracket to the spring clip

- Latch the spring clip into place at the desired position on the top-hat rail.

EN

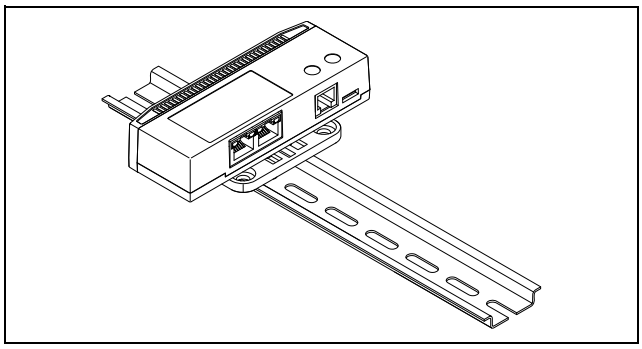

Fig. 9: Sensor with spring clip on the top-hat rail

5.4 Connecting the sensor

The CAN bus connection supplies the temperature/humidity sensor with the necessary operating voltage. A separate power supply unit does not need to be connected.

- Use a CAN bus connection cable to connect the temperature/humidity sensor to a CAN bus interface on the CMC III Processing Unit or the neighbouring component on the CAN bus (fig. 7, item 2).

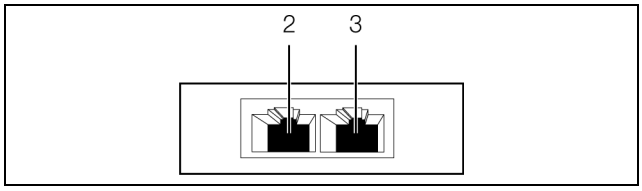

Fig. 10: Rear of the temperature/humidity sensor

Key

2 CAN bus connection, 24 V ⎓
3 CAN bus connection, 24 V ⎓

The following CAN bus connection cables from the CMC III accessories can be used:

– DK 7030.090 (length 0.5 m)
– DK 7030.091 (length 1 m)
– DK 7030.092 (length 1.5 m)
– DK 7030.093 (length 2 m)
– DK 7030.480 (length 3 m)
– DK 7030.490 (length 4 m)
– DK 7030.094 (length 5 m)
– DK 7030.095 (length 10 m)

The software is updated, if necessary, after being connected. The status LED of the temperature/humidity sensor glows blue throughout the entire update process and also flashes purple while the sensor itself receives an update.
In addition, the status LED of the CMC III Processing Unit flashes white and a corresponding message appears on the website.

Note:
No settings can be modified as long as the update process is running.

The update of the sensor is complete when the following conditions have been fulfilled:

1. The LEDs on the CAN bus connection of the sensor light green.
2. The multi-LED of the sensor behind the front panel flashes blue and green, yellow or red, depending on the condition of the sensor.

Further components are connected as a daisy chain.

- If necessary, connect another component (e.g. another sensor type) to the second, free CAN bus interface of the temperature/humidity sensor (fig. 10, item 3).

Status change display:

– The two green and the two red CAN bus LEDs on the CAN bus connection flash.
– The multi-LED of the Processing Unit flashes continually in the sequence green – orange – red.
– The multi-LED of the temperature/humidity sensor flashes blue continuously.

- Press the "C" key on the CMC III Processing Unit (an initial audio signal will sound) and keep it pressed for approx. 3 seconds until a second audio signal is heard.

Note:
The multi-LED of the temperature/humidity sensor lights red continuously for approx. 5 seconds while the average value of the temperature is being determined.

Note:
See section 6.3.1 "Multi-LED displays" for a list of all of the multi-LED displays.

EN

6 Operation

6.1 Activating the temperature/humidity sensor

After connecting the temperature/humidity sensor to a neighbouring component using a CAN bus connecting cable, the temperature/humidity sensor starts automatically (see section 5.4 "Connecting the sensor"). Separate activation is not required.

6.2 Operating and display elements

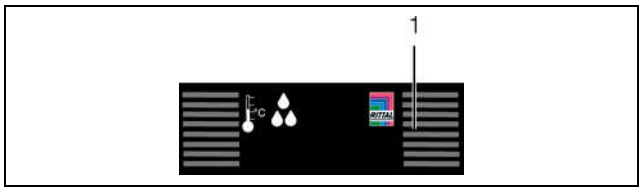

Fig. 11: Front of the temperature/humidity sensor

Key

1 Multi-LED for status display

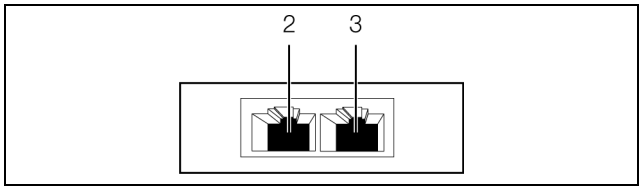

Fig. 12: Rear of the temperature/humidity sensor

Key

2 CAN bus connection, 24 V ⎓

3 CAN bus connection, 24 V ⎓

6.3 LED displays

A multi-LED for the status display is integrated into the front of the temperature/humidity sensor (fig. 11, item 1). Further LEDs are located at the rear on the CAN bus connection (fig. 12, item 2 and item 3).

6.3.1 Multi-LED displays

The status of the temperature/humidity sensor can be read on the multi-LED.

Continuously lit

Colour	Status
Red	For approximately 5 seconds while the average value is being determined the first time.
Red (continuously lit)	Invalid measured value

Tab. 1: Multi-LED continuously lit

Flashing codes

Colour	Status
Green	When the measured value changes or, at the latest, every 5 seconds.
Orange	The temperature/humidity sensor has the "warning" status. Fast flashing: upper limit value overshot. Slow flashing: lower limit value undershot.
Red	The temperature/humidity sensor has the "alarm" status. Fast flashing: upper limit value overshot. Slow flashing: lower limit value undershot.
Blue	Communication via the CAN bus.

Tab. 2: Multi-LED flashing codes

6.3.2 LED displays on the CAN bus connection

A red and a green LED are located on the CAN bus connection. They display the status of the CAN bus.

Colour	Status
Green (continuously lit)	Communication via the CAN bus possible.
Red (flashing)	Transmission fault.

Tab. 3: LEDs for the CAN bus connection

6.4 Operating the CMC III Processing Unit from the website

After logging on to the CMC III Processing Unit, the web interface for operating the device is displayed.

- First select the "CMCIII-HUM" entry in the navigation area.

Similar to the CMC III Processing Unit, the **Configuration** tab can be used to individually configure the access rights for the temperature/humidity sensor (**Access Rights** button) and the alarm messages (**Alarm Configuration** button).

The **Observation** tab is used to configure all of the settings for the temperature/humidity sensor, such as the limit values for warning and alarm messages.
In the following sections 6.4.1 "Device" to 6.4.3 "Humidity", only those parameters which you can modify are described. There are also display values that provide information.

6.4.1 Device

General settings for the temperature/humidity sensor are configured at the "Device" level.

EN

Parameter	Explanation
Description	Specific description of the temperature/humidity sensor.
Location	Installation location of the temperature/humidity sensor.

Tab. 4: Settings in the "Device" level

In addition, parameters that provide detailed information about the temperature/humidity sensor, such as the version of the deployed software and hardware, are also displayed. You should have such information available, in particular to permit fast troubleshooting of queries with Rittal.

6.4.2 Temperature

The temperature settings are configured on the "Temperature" level.

Note:
The "Offset" variable is only available from hardware version V0203 onwards.

Parameter	Explanation
DescName	Specific description of the temperature measured.
Offset	The offset value used to correct the measured temperature.
SetPtHigh-Alarm	Upper limit temperature for which an alarm message is issued when exceeded.
SetPtHigh-Warning	Upper limit temperature for which a warning message is issued when exceeded.
SetPtLow-Warning	Lower limit temperature for which a warning message is issued when fallen below.
SetPtLow-Alarm	Lower limit temperature for which an alarm message is issued when fallen below.
Hysteresis	The necessary percentage deviation for falling below or exceeding the limit temperature to trigger a status change (see the assembly, installation and operating instructions for the CMC III Processing Unit).

Tab. 5: Settings in the "Temperature" level

The following parameters are also displayed for the temperature/humidity sensor:

Parameter	Explanation
Value	Currently measured temperature value.
Status	Current status of the sensor's temperature value, taking into account the hysteresis.

Tab. 6: Displays in the "Temperature" level

Note:
If the value "0" is entered for all limit values at the "Temperature" level, the status of the temperature sensor is always "OK".

6.4.3 Humidity

The humidity settings are configured on the "Humidity" level.

Parameter	Explanation
DescName	Specific description of the humidity measured.
SetPtHigh-Alarm	Upper limit for the humidity; an alarm message is output if it is exceeded.
SetPtHigh-Warning	Upper limit for the humidity; a warning message is output if it is exceeded.
SetPtLow-Warning	Lower limit for the humidity; a warning message is output if it is fallen below.
SetPtLow-Alarm	Lower limit for the humidity; an alarm message is output if it is fallen below.
Hysteresis	The necessary percentage deviation for falling below or exceeding the limit for the humidity to trigger a status change (see the assembly, installation and operating instructions for the CMC III Processing Unit).

Tab. 7: Settings in the "Humidity" level

The following parameters are also displayed for the temperature/humidity sensor:

Parameter	Explanation
Value	Currently measured humidity.
Status	Current status of the sensor's humidity value, taking account of the hysteresis.

Tab. 8: Displays in the "Humidity" level

Note:
If the value "0" is entered for all limit values at the "Temperature" level, the status of the humidity sensor is always "OK".

EN

7 Storage and disposal

7.1 Storage

If the device is not used for a long period, Rittal recommends that it is disconnected from the mains power supply and protected from damp and dust.

7.2 Disposal

Since the temperature/humidity sensor consists mainly of the "housing" and "circuit board" parts, the device must be passed on to the electronic waste recycling system for disposal.

EN

8 Technical specifications

Technical specifications		CMC III temperature/humidity sensor
Model no.		DK 7030.111
W x H x D (mm)		80 x 28 x 40
Operating temperature range		0 °C…+55 °C
Storage temperature		-45 °C…+85 °C
Operating humidity range		5% to 95% relative humidity, non-condensing
Temperature measurement precision		±1 K
Temperature resolution		0.1 K
Humidity measurement range		1%…99% relative humidity
Humidity measurement precision		±3% relative humidity in the range 20%…80% relative humidity
Protection category		IP 30 to IEC 60 529
Inputs and outputs	CAN bus (RJ 45)	2 x
Operation/signals	LED display	OK / warning / alarm / network status

Tab. 9: Technical specifications

9 Customer service addresses

For technical queries, please contact:
Tel.: +49(0)2772 505-9052
E-mail: info@rittal.com
Homepage: www.rittal.com

For complaints or service requests, please contact:
Tel.: +49(0)2772 505-1855
E-mail: service@rittal.de

Rittal – The System.

Faster – better – everywhere.

- Enclosures
- Power Distribution
- Climate Control
- IT Infrastructure
- Software & Services

You can find the contact details of all
Rittal companies throughout the world here.

www.rittal.com/contact

07.2020 / D-0000-00000568-01

RITTAL GmbH & Co. KG
Auf dem Stuetzelberg · 35745 Herborn · Germany
Phone +49 2772 505-0
E-mail: info@rittal.de · www.rittal.com