Industrial Signalling



klaxon
Signalling Solutions



Introduction

Klaxon Signals manufactures the world's largest range of sound signalling equipment and solutions for the European and worldwide market place.

Product Range
Klaxon's extensive product range includes: electronic sounders; voice enhanced sounders; sirens; beacons; bells; and buzzers. These products can be used in a variety of applications and are categorised within Klaxon's internal strategic business units: Fire; Industrial; Emergency Warning Systems. This brochure features products for industrial signalling applications.

Worldwide Distribution Network
Klaxon's distribution network gives the benefit of experienced staff, both on a global and local basis, and are fully conversant with Klaxon's visual and sound signalling equipment.

Commitment to quality and innovation
Working to ISO 9001, Klaxon's manufacturing team has the latest production, testing and demonstration facilities, including PCB design and anechoic chambers to ensure the highest possible standards of manufacture and product quality. A continued product development programme, complemented by rigorous quality checks, gives customers the most up to date product offering available in today's market.

Product Approvals

Legislation plays a key part in keeping sounders and safety systems up to date. For example, the Construction Products Directive (CPD) requires that fire system components sold in Europe have to comply with the relevant part of EN54.

"Klaxon Signals is dedicated to continual third party testing and certification both in home and export markets."
Technical Manager

Klaxon Signals works alongside partner organisations and customers to ensure its products, and the installation of its products, are in line with LPCB, ISO9001, EN54, BS5839 and DDA requirements. Any organisation or individual wishing to discuss its, or Klaxon's, obligations regarding new legislation may contact Klaxon's technical team directly or visit **www.klaxonsignals.com**





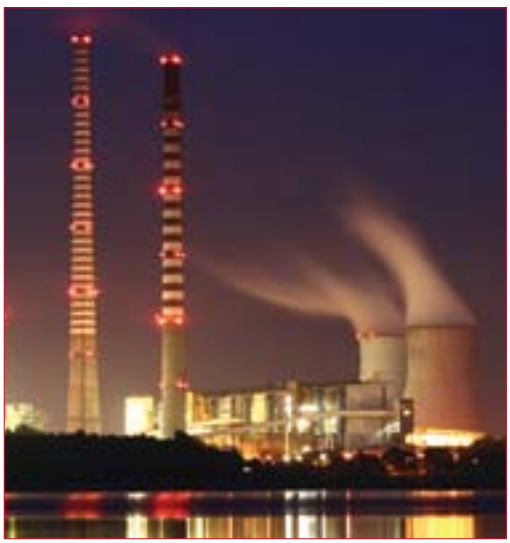

Contents

Sounders	Page 4
Beacons	Page 9
Sounder Beacons	Page 14
Voice Sounders	Page 23
Hazardous Area Equipment	Page 29
Motor Driven Sirens	Page 35
Hand Operated Sirens	Page 41



Sounders

Range of sound outputs for various audible warning applications.

Sonos Sounder (DC)

A general purpose electronic sounder. Features the TimeSaver base where connections are made to the base during the initial wiring phase which results in faster and more reliable installation. The sounder head 'twists and clicks' into the base on commissioning, avoiding the wiring and connection problems associated with traditional sounders.

Deep base units have weatherproof protection to IP65 and can be used in all locations both indoors and outdoors.

Sonos Sounder units are available in either red or white and with a choice of deep or shallow TimeSaver bases.

Features

- **Wide voltage range**
- **Simple 'First Fix' installation**
- **2 alarm stages**
- **32 tones**
- **Tone and volume can be preset or adjusted off-base**
- **Weatherproof to IP65 (deep base units)**
- **Synchronised alarm tones**
- **Volume control - Typical 8dB**



Applications - Fire; security; industrial alarm

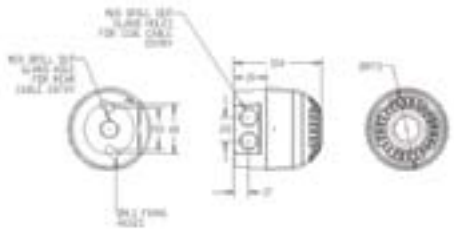

Deep Base

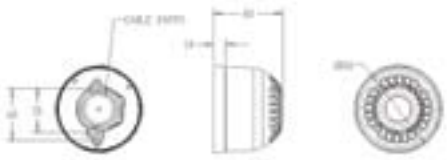

Shallow Base

Specifications

Combined Part No.	Base Part No.	Head Part No.	Colours	Audibility at 1m	Tones	Voltage	Current (tone dependent)
PSS-0003	PSO-0001 shallow base	PSS-0084	Red	Up to 106dB (A)	32	9-60V DC	4-41mA
PSS-0039	PSO-0006 shallow base	PSS-0089	White	Up to 106dB (A)	32	9-60V DC	4-41mA
PSS-0020	PSO-0003 deep base	PSS-0084	Red	Up to 106dB (A)	32	9-60V DC	4-41mA
PSS-0050	PSO-0007 deep base	PSS-0089	White	Up to 106dB (A)	32	9-60V DC	4-41mA

IP Rating: IP65 (deep base) IP21 (shallow base) **Operating Temp:** -25°C to +70°C **Construction:** Flame Retardant Polycarbonate
Cable Entries: Deep Base: 2 x 20mm cable glands **Weight:** 0.22kg (shallow base) 0.25kg (deep base)
Compliance: EN54 3 Type A (shallow base) EN54-3 Type B (deep base)

Sounders

Sonos Sounder (AC)

A general purpose AC electronic sounder for industrial applications.

With a choice of 32 tones including all the major European standards, Sonos is suitable for use across Europe.

Sonos AC sounders are weatherproof to IP65 and can be used in all locations both indoors and outdoors.

Sonos sounder units are available in either red or white.

Features

- **Dual Voltage 110V AC or 230V AC**
- **Up to 102 dB (A) @ 1 metre**
- **Weatherproof to IP65**
- **Synchronised alarm tones**
- **Volume control - 20dB**



Applications - Industrial alarm

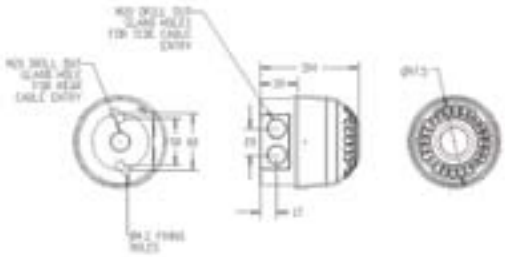

Specifications

Part No.	Base	Colours	Audibility at 1m	Tones	Voltage	Current
PSS-0060	deep base	Red	Up to 102dB (A)	32	110/230V AC	80mA
PSS-0063	deep base	White	Up to 102dB (A)	32	110/230V AC	80mA

IP Rating: IP65 **Operating Temp:** -25ºC to +55ºC **Construction:** Flame Retardant Polycarbonate **Cable Entries:** 2 x 20mm cable glands
Weight: 0.25kg **Compliance:** EN60950

Nexus Sounder (DC)

This high output sounder is designed for industrial applications.

Connections are made to the base during the initial wiring phase which results in faster and more reliable installation. In addition, the head is fixed by quarter turn fasteners enabling faster installation and accurate seal compression for weatherproofing.

IP66 as standard means that Nexus can be installed in almost any location.

Features

- **Three alarm stages**
- **First-fix, wire to base technology**
- **IP66 rated**
- **Volume control for greater flexibility - 20dB**
- **64 tones**



Applications - Fire alarm; conveyors; process control alarm; cranes; moving machinery; general signalling

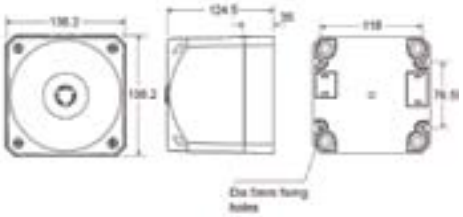

105dB sounder

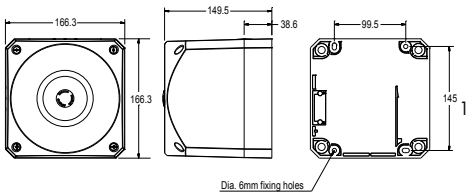

110dB and 120dB sounders

Specifications

Part No.	Desription	Audibility at 1m	Tones	Voltage	Current (tone dependent)
PNS-0001	Nexus 105	Up to 113dB (A)	64	10-60V DC	8-40mA
PNS-0013	Nexus 110	Up to 116dB (A)	64	10-60V DC	10-50mA
PNS-0005	Nexus 120	Up to 120dB (A)	64	10-60V DC	120-550mA

IP Rating: IP66 **Operating Temp:** -25°C to +70°C **Cable Entries:** 5 **Weight:** 105dB Sounder - 0.7kg; 110dB Sounder -1.1Kg; 120dB Sounder -1.8Kg
Compliance: EN54-3 Type B

Sounders

Nexus Sounder (AC)

This high output sounder is designed for industrial applications.

Connections are made to the base during the initial wiring phase which results in faster and more reliable installation. In addition, the head is fixed by quarter turn fasteners avoiding the need to screw up four individual screws thus enabling faster installation and accurate seal compression for weatherproofing.

IP66 as standard means that Nexus can be installed in almost any location.

Features

- **Three alarm stages (110dB & 120dB variants)**
- **First-fix, wire to base technology**
- **IP66 rated**
- **Volume control for greater flexibility - 20dB**
- **64 tones**
- **Low voltage option**



Applications - Conveyors; process control alarm; cranes; moving machinery; general signalling

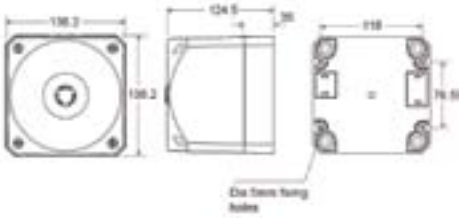

105dB sounder

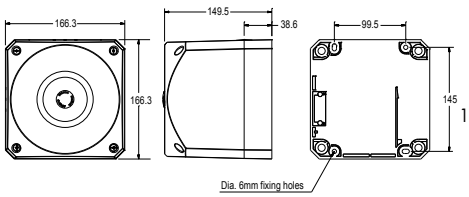

110dB and 120dB sounders

Specifications

Part No.	Description	Audibility at 1m	Tones	Voltage	Current (tone dependent)
PNS-0009	Nexus 105	Up to 113dB (A)	64	110/230V AC	40mA (max)
PNS-0018	Nexus 110	Up to 116dB (A)	64	110/230V AC	40mA (max)
PNS-0020	Nexus 110	Up to 116dB (A)	64	24-48V AC	10-50mA
PNS-0011	Nexus 120	Up to 120dB (A)	64	110/230V AC	200mA (max)

IP Rating: IP66 **Operating Temp:** -25ºC to +55ºC **Cable Entries:** 5 **Weight:** 105dB Sounder - 0.7kg; 110dB Sounder -1.1Kg; 120dB Sounder -1.8Kg



Beacons

High efficiency LED and high output Xenon beacons for visual indication.

Beacons

Sonos LED Beacon (DC)

A general purpose beacon. Features the TimeSaver base where connections are made to the base during the initial wiring phase which results in faster and more reliable installation. The beacon head 'twists and clicks' into the base on commissioning, avoiding the wiring and connection problems associated with traditional alarm devices.

Deep base units have weatherproof protection to IP65 and can be used in all locations both indoors and outdoors. The Sonos Beacon utilises a full faced, translucent case which provides a much larger lens area and a greater spread of light.

Sonos Beacon units have a deep or shallow red colour base as standard and are available with a red or amber lens.

Features

- **High efficiency LED beacon consumes less than 5mA**
- **Simple 'First Fix' installation (no second fix wiring)**
- **Weatherproof to IP65 (deep base units)**
- **Synchronised flash**

Lens Colour Options





Applications - Fire; security; industrial alarm

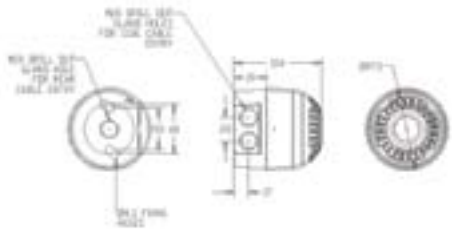

Deep Base



Shallow Base

Specifications

Part No.	Base	Colours	Voltage	Current
PSB-0009	Red shallow base	Red lens	17-60V DC	5mA
PSB-0026	Red shallow base	Amber lens	17-60V DC	5mA
PSB-0017	Red deep base	Red lens	17-60V DC	5mA
PSB-0031	Red deep base	Amber lens	17-60V DC	5mA
PSB-0042	White shallow base	Red LED	17-60V DC	5mA
PSB-0045	White deep base	Red LED	17-60V DC	5mA
PSB-0048	White shallow base	Red lens	17-60V DC	5mA
PSB-0050	White shallow base	Amber lens	17-60V DC	5mA
PSB-0042	White shallow base	Clear lens	17-60V DC	5mA
PSB-0035	White deep base	Red lens	17-60V DC	5mA
PSB-0036	White deep base	Amber lens	17-60V DC	5mA
PSB-0045	White deep base	Clear lens	17-60V DC	5mA

IP Rating: IP65 (deep base) IP21 (shallow base) **Operating Temp:** -25°C to +70°C **Construction:** Flame Retardant Polycarbonate
Cable Entries: 2 x 20mm cable glands (deep base) **Weight:** 0.22kg (shallow base) 0.25kg (deep base)

Sonos Xenon Beacon (5J)

A general purpose, high output xenon beacon designed for industrial applications.

Sonos xenon beacons are weatherproof to IP65 and can be used in all locations both indoors and outdoors.

The Sonos xenon beacon unit utilises a full faced, translucent case giving a much larger lens area. This results in a far greater light spread for more effective warning.



Applications - Industrial alarm

Features

- **High output 5J xenon beacon**
- **10-60V DC or 110/230V AC**
- **Simple 'First Fix' installation**
- **Weatherproof to IP65**
- **Synchronised flash (DC version)**
- **Single/double flash (DC version)**
- **No surge current**

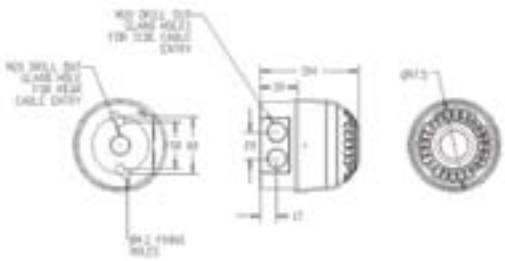

Lens Colour Options



Specifications

Part No.	Base	Colours	Voltage	Current
PSB-0002	Red deep base	Red lens	110/230V AC	70mA
PSB-0004	Red deep base	Amber lens	110/230V AC	70mA
PSB-0038	Red deep base	Clear lens	110/230V AC	70mA
PSB-0054	Red deep base	Green lens	110/230V AC	70mA
PSB-0056	Red deep base	blue lens	110/230V AC	70mA
PSB-0033	White deep base	Red lens	110/230V AC	70mA
PSB-0034	White deep base	Amber lens	110/230V AC	70mA
PSB-0119	White deep base	Clear lens	110/230V AC	70mA
PSB-0120	White deep base	Blue lens	110/230V AC	70mA
PSB-0121	White deep base	Green lens	110/230V AC	70mA
PSB-0039	Red deep base	Red lens	10-60V DC	330mA/24V DC
PSB-0040	Red deep base	Amber lens	10-60V DC	330mA/24V DC
PSB-0041	Red deep base	clear lens	10-60V DC	330mA/24V DC
PSB-0055	Red deep base	green lens	10-60V DC	330mA/24V DC
PSB-0057	Red deep base	blue lens	10-60V DC	330mA/24V DC

IP Rating: IP65 **Operating Temp:** -25°C to +55°C **Construction:** Flame Retardant Polycarbonate **Cable Entries:** 2 x 20mm cable glands
Weight: 0.25kg

Beacons

Flashguard LED Beacons

Flashguard weatherproof LED beacons are ideal visual indicators in a variety of applications.

All Flashguard beacons are fitted with a diffuser for greater visibility and spread of light. Two styles are available. Standard and Ultra Low Profile.

Standard: includes a terminal block and a 27mm deep base supplied with a seal and grommet.

Ultra Low Profile: comes complete with a screw and nylon wing nut and is supplied with mounting gasket and 40cm of cable.

A weatherproof cable connector is available to upgrade the product from IP65 rating to IP67.

Features

- **Compact, ultra modern sleek appearance**
- **Long life LED design**
- **Ease of installation with first-fix option on standard models**
- **Weatherproof to IP67 (with cable connector)**
- **White, high quality polycarbonate housing**
- **Vandal-resistant safety locking mechanism**
- **Flashing or static indicators**

Lens Colour Options





Applications - Fire alarm; security alert; emergency warning; process control alarm

Standard and Fire Style

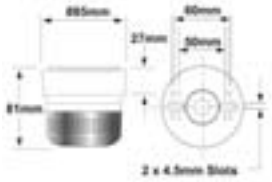

Ultra Low Profile Style

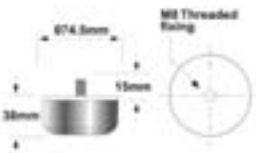

Specifications

Type and Style	Part No. Red Lens	Part No. Amber Lens	Part No. Clear Lens	Part No. Blue Lens	Part No. Green Lens	Voltage	Current	Static or Flashing	Flash Rate
LED Standard	QBS-0007	QBS-0008	QBS-0009	QBS-0010	QBS-0011	110V AC	32mA	Static	N/A
LED Standard	QBS-0012	QBS-0013	QBS-0014	QBS-0015	QBS-0016	110V AC	32mA	Flashing	1Hz
LED Standard	QBS-0022	QBS-0023	QBS-0024	QBS-0025	QBS-0026	230V AC	32mA	Static	N/A
LED Standard	QBS-0027	QBS-0028	QBS-0029	QBS-0030	QBS-0031	230V AC	32mA	Flashing	1Hz
LED Standard	QBS-0060	QBS-0063	QBS-0065	QBS-0067	QBS-0069	11/35V DC	50mA**	Static/Flashing*	1Hz
LED Ultra Low Profile	QBS-0062	QBS-0064	QBS-0066	QBS-0068	QBS-0070	11/35V DC	50mA**	Static/Flashing*	1Hz

*These units are user-configurable
**Clear, blue and green versions draw upto 100mA

IP Rating: IP65 (Standard) IP67 (With cable connector) **Operating Temp:** -20°C to +70°C **Construction:** UV Stabilised Polycarbonate
Weight: 0.14kg (Standard) 0.08kg (Ultra)

Flashguard Xenon Beacons

Flashguard weatherproof xenon beacons are ideal visual indicators in a variety of applications.

All Flashguard beacons are fitted with a diffuser for greater visibility and spread of light. Two styles are available, Standard and Ultra Low Profile.

Standard: includes a terminal block and a 27mm deep base supplied with a seal and grommet.

Ultra Low Profile: comes complete with a screw and nylon wing nut and is supplied with mounting gasket and 40cm of cable.

A weatherproof cable connector is available to upgrade the product from IP65 rating to IP67.

Features

- **Compact, ultra modern sleek appearance**
- **Ease of installation with first-fix option on standard models**
- **Weatherproof to IP67 (with cable connector)**
- **White, high quality polycarbonate housing**
- **12V and 24V DC options in one user-selectable unit**
- **Vandal-resistant safety locking mechanism**

Lens Colour Options





Applications - Fire alarm; security alert; emergency warning; process control alarm

Standard and Fire Style

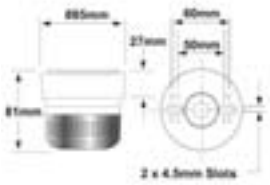

Ultra Low Profile Style

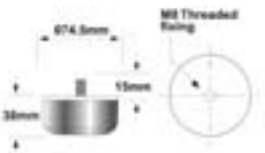

Specifications

Type and Style	Part No. Red Lens	Part No. Amber Lens	Part No. Clear Lens	Part No. Blue Lens	Part No. Green Lens	Voltage	Power	Current	Flash Rate
Xenon Standard	QBS-0002	QBS-0003	QBS-0004	QBS-0005	QBS-0006	110V AC	3W	24mA	1Hz
Xenon Standard	QBS-0017	QBS-0018	QBS-0019	QBS-0020	QBS-0021	230V AC	3W	15mA	1Hz
Xenon Standard	QBS-0052	QBS-0054	QBS-0055	QBS-0056	QBS-0058	12/24V DC*	3W	140mA/85mA	1Hz
Xenon Standard	QBS-0038	QBS-0042	TKA-0126	QBS-0047	QBS-0050	12/24V DC*	2W	115mA/70mA	1Hz
Xenon Standard	QBS-0032	QBS-0034	QBS-0035	QBS-0036	QBS-0037	12/24V DC*	1W	60mA/45mA	1Hz
Xenon Ultra Low Profile	QBS-0040	QBS-0044	QBS-0046	QBS-0049	QBS-0051	12/24V DC*	2W	115mA/70mA	1Hz

*These units are user-configurable

IP Rating: IP65 (Standard) IP67 (Ultra) **Operating Temp:** -20°C to +40°C **Construction:** UV Stabilised Polycarbonate
Weight: 0.14kg (Standard) 0.08kg (Ultra)



Sounder Beacons

Combined sounder beacons for audio visual warning at the same point.

Sonos Sounder Beacon (DC)

A general purpose electronic sounder for fire, security and industrial applications; the Sonos Sounder Beacon is certified to EN54.

With the TimeSaver base, connections are made to the base during the initial wiring phase which results in faster and more reliable installation. The sounder head 'twists and clicks' into the base on commissioning, avoiding the wiring and connection problems associated with traditional sounders. With a choice of 32 tones including all the major international standards, the Sonos Sounder Beacon has universal acceptance.

Features

- **Low current LED beacon**
- **Simple 'First Fix' installation**
- **Weatherproof to IP65 (deep base units)**
- **Choice of lens colours**
- **Sounder and beacon can be controlled separately**
- **Tone and volume can be preset or adjusted off-base - 20dB**
- **Separate connections for sounder & beacon**

Lens Colour Options







Applications - Fire; security; industrial alarm

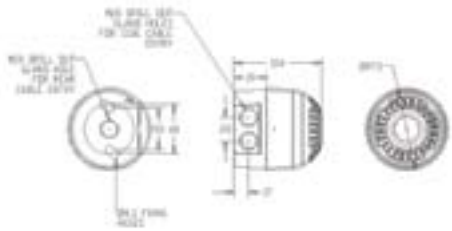

Deep Base

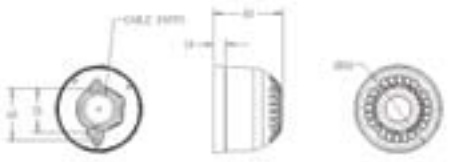

Shallow Base

Specifications

Part No.	Base	Colours	Audibility at 1m	Tones	Voltage	Sounder Current	Beacon Current
PSC-0002	Red shallow base	Red lens	Up to 106dB (A)	32	17-60V DC	4-45mA	5mA
PSC-0025	Red shallow base	Amber lens	Up to 106dB (A)	32	17-60V DC	4-45mA	5mA
PSC-0013	Red deep base	Red lens	Up to 106dB (A)	32	17-60V DC	4-45mA	5mA
PSC-0027	Red deep base	Amber lens	Up to 106dB (A)	32	17-60V DC	4-45mA	5mA
PSC-0035	White shallow base	Red lens	Up to 106dB (A)	32	17-60V DC	4-45mA	5mA
PSC-0040	White shallow base	Amber lens	Up to 106dB (A)	32	17-60V DC	4-45mA	5mA
PSC-0029	White deep base	Red lens	Up to 106dB (A)	32	17-60V DC	4-45mA	5mA
PSC-0034	White deep base	Amber lens	Up to 106dB (A)	32	17-60V DC	4-45mA	5mA

Other colours/combinations are available on request

IP Rating: IP65 (deep base) IP21 (shallow base) **Operating Temp:** -25°C to +70°C **Construction:** Flame Retardant Polycarbonate
Cable Entries: Deep Base: 2 x 20mm cable glands **Weight:** 0.22kg (shallow base) 0.25kg (deep base)
Compliance: EN54 3 Type A (shallow base) EN54 3 Type B (deep base)

Sounder Beacons

Sonos Sounder Beacon (AC)

A general purpose AC electronic sounder beacon for industrial applications.

With a choice of 32 tones including all of the major international standards, the Sonos sounder beacon has universal acceptance. The full faced translucent beacon case provides a greater spread of light when compared with standard and competitor beacon products.

Sonos AC sounder beacons are weatherproof to IP65 and can be used in all locations both indoors and outdoors.

Features

- **Dual voltage 110V AC or 230V AC**
- **Up to 102dB (A) @ 1metre**
- **Easy installation**
- **Weatherproof to IP65**
- **Synchronised alarm tones**
- **High efficiency LED beacon**
- **Volume control - 20dB**

Lens Colour Options





Applications - Safety; industrial alarm

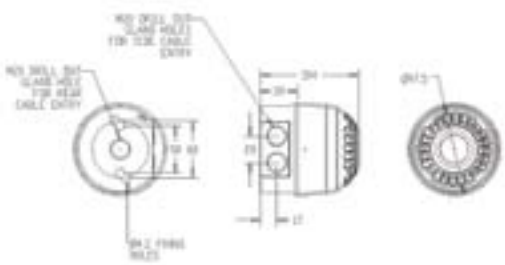

Specifications

Part No.	Base	Colours	Audibility at 1m	Tones	Voltage	Current (tone dependent)
PSS-0094	Red deep base	Red Lens	Up to 102dB (A)	32	110/230V AC	80mA
PSS-0096	Red deep base	Amber Lens	Up to 102dB (A)	32	110/230V AC	80mA

IP Rating: IP65 **Operating Temp:** -25°C to +55°C **Weight:** 0.25Kg **Construction:** Flame retardant Polycarbonate **Compliance:** EN60950
Cable Entries: 2x20mm cable gland

Nexus 105 Sounder Beacon (DC)

The Nexus 105 is a high output, low current consumption sounder beacon designed for fire and industrial applications. Connections are made to the base during the initial wiring phase which results in faster and more reliable installation. In addition, the head is fixed by quarter turn fasteners avoiding the need to screw up four individual screws thus enabling faster installation and accurate seal compression for weatherproofing. The Nexus Sounder Beacon is available with a high efficiency LED or high output xenon beacon. The combination of a powerful sounder and high output beacon ensures a very effective audio-visual signal. 110dB and 120dB units, as well as AC variants, are also available.

Features

- **High sound output: 113dB (max); 105dB (typical)**
- **5J xenon or high efficiency LED beacon option**
- **Quarter turn fasteners for ease of installation**
- **First-fix, wire to base technology**
- **IP66 rated**
- **Three alarm stages**
- **Low in-rush current (LED only)**
- **Static/flashing mode (LED only)**
- **Volume control for greater flexibility - 20dB**
- **64 tones**
- **Separate connections for sounder & beacon**

Lens Colour Options





Applications - Fire alarm; conveyors; process control alarm; cranes; moving machinery; general signalling; marine

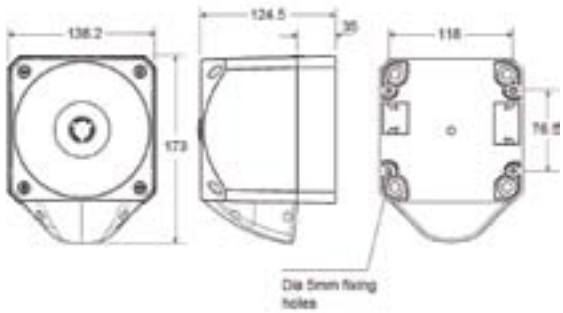

Specifications

Part No.	Lens Colour	Beacon Type	Audibility at 1m	Tones	Voltage	Sounder Current	Beacon Current
PNC-0001	Red lens	Xenon beacon	Up to 113dB (A)	64	10-60V DC	8-40mA	330mA@24V DC
PNC-0002	Amber lens	Xenon beacon	Up to 113dB (A)	64	10-60V DC	8-40mA	330mA@24V DC
PNC-0020	Clear lens	Xenon beacon	Up to 113dB (A)	64	10-60V DC	8-40mA	330mA@24V DC
PNC-0043	Blue lens	Xenon beacon	Up to 113dB (A)	64	10-60V DC	8-40mA	330mA@24V DC
PNC-0041	Green lens	Xenon beacon	Up to 113dB (A)	64	10-60V DC	8-40mA	330mA@24V DC
PNC-0024	Red lens	LED beacon	Up to 113dB (A)	64	10-60V DC	8-40mA	18mA/65mA**
PNC-0028	Amber lens	LED beacon	Up to 113dB (A)	64	10-60V DC	8-40mA	18mA/65mA**
PNC-0045	Clear lens	LED beacon	Up to 113dB (A)	64	10-60V DC	8-40mA	18mA/65mA**
PNC-0047	Blue lens	LED beacon	Up to 113dB (A)	64	10-60V DC	8-40mA	18mA/65mA**
PNC-0046	Green lens	LED beacon	Up to 113dB (A)	64	10-60V DC	8-40mA	18mA/65mA**

** Flashing/Static current consumption figures.

IP Rating: IP66 **Operating Temp:** -25°C to +70°C **Cable Entries:** 5 **Weight:** 0.8kg **Compliance:** EN54-3 Type

Sounder Beacons

Nexus 105 Sounder Beacon (AC)

The Nexus 105 is a high output sounder-beacon designed for industrial applications.

Connections are made to the base during the initial wiring phase which results in faster and more reliable installation. In addition, the head is fixed by quarter turn fasteners enabling faster installation and accurate seal compression for weatherproofing.

The combination of powerful sounder and high output xenon beacon ensures a very effective audio-visual signal.

110dB and 120dB units, as well as DC variants, are also available.

Features

- **High sound output: 113dB (max); 105dB typical**
- **5J xenon beacon**
- **Quarter turn fasteners for ease of installation**
- **First-fix, wire to base technology**
- **IP66 rated**
- **Volume control for greater flexibility - 20dB**
- **64 tones**
- **Separate connections for sounder & beacon**

Lens Colour Options





Applications - Conveyors; process control alarm; cranes; moving machinery; general signalling; marine

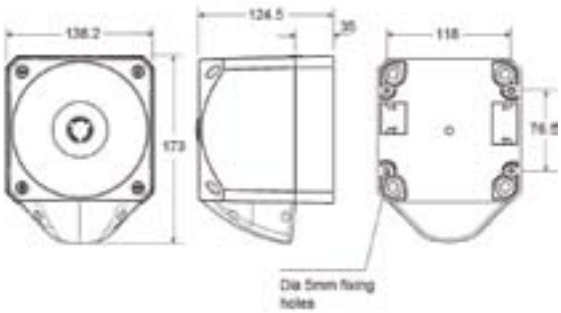

Specifications

Part No.	Lens Colour	Beacon Type	Audibility at 1m	Tones	Voltage	Sounder Current	Beacon Current
PNC-0005	Red lens	5J xenon beacon	Up to 113dB (A)	64	110/230V AC	40mA (max)	70mA
PNC-0007	Amber lens	5J xenon beacon	Up to 113dB (A)	64	110/230V AC	40mA (max)	70mA
PNC-0019	Clear lens	5J xenon beacon	Up to 113dB (A)	64	110/230V AC	40mA (max)	70mA
PNC-0044	Blue lens	5J xenon beacon	Up to 113dB (A)	64	110/230V AC	40mA (max)	70mA
PNC-0042	Green lens	5J xenon beacon	Up to 113dB (A)	64	110/230V AC	40mA (max)	70mA

IP Rating: IP66 **Operating Temp:** -25°C to +55°C **Cable Entries:** 5 **Weight:** 0.8kg

Nexus 110 Sounder Beacon (DC)

The Nexus 110 is a high output, low current consumption sounder beacon designed for fire and industrial applications. Connections are made to the base during the initial wiring phase which results in faster and more reliable installation. In addition, the head is fixed by quarter turn fasteners enabling faster installation and accurate seal compression for weatherproofing. The Nexus Sounder Beacon is available with either a high efficiency LED or xenon beacon. The combination of a powerful sounder and high output beacon ensures a very effective audio-visual signal. 105dB and 120dB units, as well as AC variants, are also available.

Features

- **High sound output: 116dB (max); 110dB (typical)**
- **Three alarm stages**
- **5J xenon or high efficiency LED beacon option**
- **Quarter turn fasteners for ease of installation**
- **First-fix, wire to base technology**
- **IP66 rated**
- **Volume control for greater flexibility - 20dB**
- **Low in-rush current (LED only)**
- **Static/flashing mode (LED only)**
- **64 tones**
- **Separate connections for sounder & beacon**

Lens Colour Options





Applications - Fire alarm; conveyors; process control alarm; cranes; moving machinery; general signalling; marine

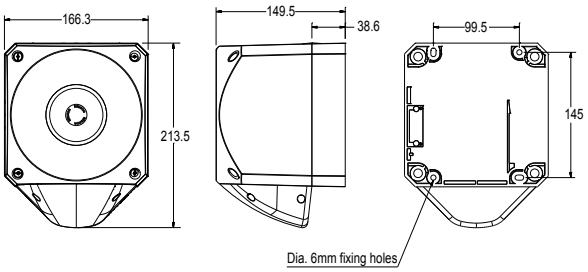

Specifications

Part No.	Lens Colour	Beacon Type	Audibility at 1m	Tones	Voltage	Sounder Current	Beacon Current
PNC-0013	Red lens	Xenon beacon	Up to 116dB (A)	64	10-60V DC	10-50mA	330mA@24V DC
PNC-0015	Amber lens	Xenon beacon	Up to 116dB (A)	64	10-60V DC	10-50mA	330mA@24V DC
PNC-0021	Clear lens	Xenon beacon	Up to 116dB (A)	64	10-60V DC	10-50mA	330mA@24V DC
PNC-0050	Blue lens	Xenon beacon	Up to 116dB (A)	64	10-60V DC	10-50mA	330mA@24V DC
PNC-0048	Green lens	Xenon beacon	Up to 116dB (A)	64	10-60V DC	10-50mA	330mA@24V DC
PNC-0029	Red lens	LED beacon	Up to 116dB (A)	64	10-60V DC	10-50mA	18mA/65mA**
PNC-0034	Amber lens	LED beacon	Up to 116dB (A)	64	10-60V DC	10-50mA	18mA/65mA**
PNC-0052	Clear lens	LED beacon	Up to 116dB (A)	64	10-60V DC	10-50mA	18mA/65mA**
PNC-0054	Blue lens	LED beacon	Up to 116dB (A)	64	10-60V DC	10-50mA	18mA/65mA**
PNC-0043	Green lens	LED beacon	Up to 116dB (A)	64	10-60V DC	10-50mA	18mA/65mA**

** Flashing/Static current consumption figures.

IP Rating: IP66 **Operating Temp:** -25°C to +70°C **Cable Entries:** 5 **Weight:** 1.2kg **Compliance:** EN54-3 Type B

Sounder Beacons

Nexus 110 Sounder Beacon (AC)

The Nexus 110 is a high output, sounder beacon designed for industrial applications.

Connections are made to the base during the initial wiring phase which results in faster and more reliable installation. In addition, the head is fixed by quarter turn fasteners enabling faster installation and accurate seal compression for weatherproofing.

The combination of powerful sounder and high output beacon ensures a very effective audio-visual signal.

Features

- **High sound output: 116dB (max); 110dB typical**
- **Low voltage AC variant**
- **5J xenon and LED beacon options**
- **Three alarm stages**
- **Quarter turn fasteners for ease of installation**
- **First-fix, wire to base technology**
- **IP66 rated**
- **Volume control for greater flexibility - 20dB**
- **64 tones**
- **Separate connections for sounder & beacon**

Lens Colour Options





Applications - Conveyors; process control alarm; cranes; moving machinery; general signalling; marine

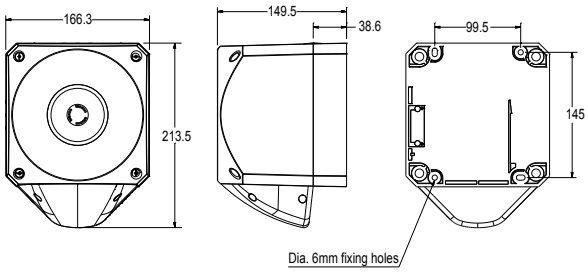

Specifications

Part No.	Lens Colour	Beacon Type	Audibility at 1m Dimensions:	Tones	Voltage	Sounder Current	Beacon Current
PNC-0062	Red lens	LED beacon	116dB (A)	64	24-48V AC	30-100mA	-
PNC-0063	Amber lens	LED beacon	116dB (A)	64	24-48V AC	30-100mA	-
PNC-0016	Red lens	Xenon 5J beacon	116dB (A)	64	110/230V AC	40mA (max)	70mA
PNC-0018	Amber lens	Xenon 5J beacon	116dB (A)	64	110/230V AC	40mA (max)	70mA
PNC-0072	Clear lens	Xenon 5J beacon	116dB (A)	64	110/230V AC	40mA (max)	70mA
PNC-0051	Blue lens	Xenon 5J beacon	116dB (A)	64	110/230V AC	40mA (max)	70mA
PNC-0049	Green lens	Xenon 5J beacon	116dB (A)	64	110/230V AC	40mA (max)	70mA

IP Rating: IP66 **Operating Temp:** -25°C to +55°C **Cable Entries:** 5 **Weight:** 1.2kg

Nexus 120 Sounder Beacon (DC)

The Nexus 120 is a very high output sounder beacon designed for fire and industrial applications. Connections are made to the base during the initial wiring phase which results in faster and more reliable installation. In addition, the head is fixed by quarter turn fasteners enabling faster installation and accurate seal compression for weatherproofing. IP66 as standard means that Nexus can be installed in almost any location. The Nexus Sounder Beacon is available with a high efficiency LED or xenon beacon. The combination of powerful sounder and high output beacon ensures a very effective audio-visual signal. 105dB and 110dB units, as well as AC variants, are also available.

Features

- **High sound output 120dB (typical)**
- **Three alarm stages**
- **5J xenon or high efficiency LED beacon option**
- **Quarter turn fasteners for ease of installation**
- **First-fix, wire to base technology**
- **IP66 rated**
- **Volume control for greater flexibility - 20dB**
- **Low in-rush current (LED only)**
- **Static/flashing mode (LED only)**
- **64 tones**
- **Separate connections for sounder & beacon**

Lens Colour Options





Applications - Fire alarm; conveyors; process control alarm; cranes; moving machinery; general signalling; marine

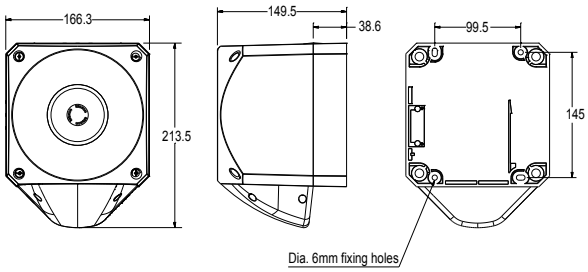

Specifications

Part No.	Lens Colour	Beacon Type	Audibility at 1m	Tones	Voltage	Sounder Current	Beacon Current
PNC-0003	Red lens	Xenon beacon	Up to 120dB (A)	64	10-60V DC	120-550mA	330mA@24V DC
PNC-0004	Amber lens	Xenon beacon	Up to 120dB (A)	64	10-60V DC	120-550mA	330mA@24V DC
PNC-0022	Clear lens	Xenon beacon	Up to 120dB (A)	64	10-60V DC	120-550mA	330mA@24V DC
PNC-0057	Blue lens	Xenon beacon	Up to 120dB (A)	64	10-60V DC	120-550mA	330mA@24V DC
PNC-0055	Green lens	Xenon beacon	Up to 120dB (A)	64	10-60V DC	120-550mA	330mA@24V DC
PNC-0035	Red lens	LED beacon	Up to 120dB (A)	64	10-60V DC	120-550mA	18mA/65mA**
PNC-0039	Amber lens	LED beacon	Up to 120dB (A)	64	10-60V DC	120-550mA	18mA/65mA**
PNC-0059	Clear lens	LED beacon	Up to 120dB (A)	64	10-60V DC	120-550mA	18mA/65mA**
PNC-0061	Blue lens	LED beacon	Up to 120dB (A)	64	10-60V DC	120-550mA	18mA/65mA**
PNC-0060	Green lens	LED beacon	Up to 120dB (A)	64	10-60V DC	120-550mA	18mA/65mA**

** Flashing/Static current consumption figures.

IP Rating: IP66 **Operating Temp:** -25°C to + 70°C **Cable Entries:** 5 **Weight:** 2kg **Compliance:** EN54-3 Type B

Sounder Beacons

Nexus 120 Sounder Beacon (AC)

The Nexus 120 is a very high output sounder beacon designed for industrial applications.

Connections are made to the base during the initial wiring phase which results in faster and more reliable installation. In addition, the head is fixed by quarter turn fasteners enabling faster installation and accurate seal compression for weatherproofing. IP66 as standard means that Nexus can be installed in almost any location.

The combination of powerful sounder and high output xenon beacon ensures a very effective audio-visual signal.

105dB and 110dB units, as well as DC variants, are also available.

Features

- **High sound output 120dB (A)**
- **5J xenon beacon**
- **Three alarm stages**
- **Quarter turn fasteners for ease of installation**
- **First-fix, wire to base technology**
- **IP66 rated**
- **Volume control for greater flexibility - 20dB**
- **64 tones**
- **Separate connections for sounder & beacon**

Lens Colour Options





Applications - Conveyors; process control alarm; cranes; moving machinery; general signalling; marine

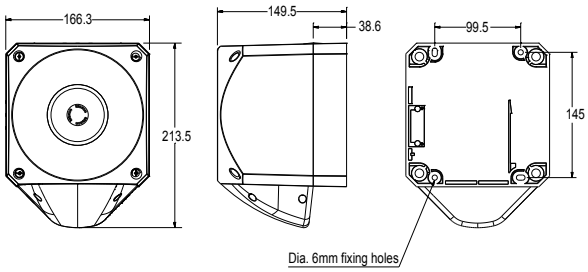

Specifications

Part No.	Lens Colour	Beacon Type	Audibility at 1m	Tones	Voltage	Sounder Current	Beacon Current
PNC-0009	Red lens	5J xenon beacon	Up to 120dB (A)	64	110/230V AC	200mA	70mA
PNC-0011	Amber lens	5J xenon beacon	Up to 120dB (A)	64	110/230V AC	200mA	70mA
PNC-0023	Clear lens	5J xenon beacon	Up to 120dB (A)	64	110/230V AC	200mA	70mA
PNC-0058	Blue lens	5J xenon beacon	Up to 120dB (A)	64	110/230V AC	200mA	70mA
PNC-0056	Green lens	5J xenon beacon	Up to 120dB (A)	64	110/230V AC	200mA	70mA

IP Rating: IP66 **Operating Temp:** -25°C to + 55°C **Cable Entries:** 5 **Weight:** 2kg



Voice Sounders

Added voice message capability for clear and effective warning.

Voice Sounders

Sonos Voice

Sonos voice sounders combine normal sounder signals with a clear, synchronised voice message to help reduce confusion and distress during an active alarm.

Available with up to 7 pre-programmed messages, selected from an extensive message library covering almost any conceivable application. Bespoke messages are also available on request.



Applications - Fire; Industrial; General safety alarm

Features

- **Capable of playing up to 7 messages over two wires with a message controller (see page 28)**
- **106dB (A) tone and 80dB (A) message outputs**
- **Extensive message library or bespoke messages available**
- **Automatic synchronisation**
- **Easily retro-fits to existing installations**
- **Includes alert tone**
- **High efficiency LED Beacon option**

Lens Colour Options



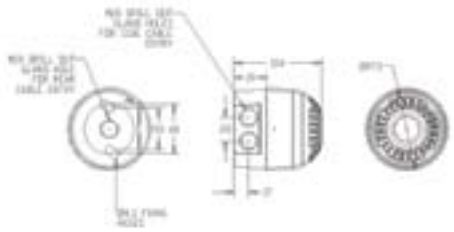

Deep Base



Shallow Base

Specifications

Part No.	Colours	Audibility at 1m Dimensions:	Tones	Voltage	Current (tone dependent)	Messages
PSV-0010 shallow base	Red	Up to 106dB (A)	32	24V DC	26mA (max)	3
PSV-0009 deep base	Red	Up to 106dB (A)	32	24V DC	26mA (max)	3
PSV-0012 shallow base	White	Up to 106dB (A)	32	24V DC	26mA (max)	3
PSV-0011 deep base	White	Up to 106dB (A)	32	24V DC	26mA (max)	3
PSV-0013 deep base	Red base, red lens	Up to 106dB (A)	32	24V DC	30mA (max)	3
PSV-0014 shallow base	Red base, red lens	Up to 106dB (A)	32	24V DC	30mA (max)	3
PSV-0015 deep base	White base, clear lens/red LED	Up to 106dB (A)	32	24V DC	30mA (max)	3
PSV-0016 shallow base	White base, clear lens/red LED	Up to 106dB (A)	32	24V DC	30mA (max)	3

IP Rating: IP65 (deep base) IP21 (shallow base) **Operating Temp:** -25°C to +70°C **Construction:** Flame Retardant Polycarbonate
Cable Entries: Deep Base: 2 x 20mm cable glands **Weight:** 0.22kg (shallow base) 0.25kg (deep base)

Nexus Voice Sounder (DC)

Nexus voice sounders combine normal sounder signals with a clear, synchronised voice message to help reduce confusion and distress during an active alarm.

Standard units are available with up to 7 pre-programmed messages. Alternative messages can be selected from an extensive message library covering almost any conceivable application. Customised messages are also available on request.

All Nexus voice sounders have a USB port that allows special messages in WAV format to be downloaded onto the sounder from any PC, providing users with the flexibility of adding/removing messages in-field.

Combined with an LED or Xenon beacon the Nexus sounder can form part of a DDA compliant system giving a clear voice message, powerful alarm tone and high output beacon for clear and effective warning.

Features

- **Choice of up to 7 messages via three volt free contacts**
- **Extensive message library or bespoke messages available**
- **Download messages in-field via built in USB port**
- **Max 116dB (A) tone and 90dB (A) message outputs**
- **Automatic synchronisation**
- **Robust construction; IP66 rated for outdoor environments**
- **Volume control - 20dB**
- **Separate connections for sounder & beacon**



Applications - Fire alarm, Industrial alarm, Process control alarm

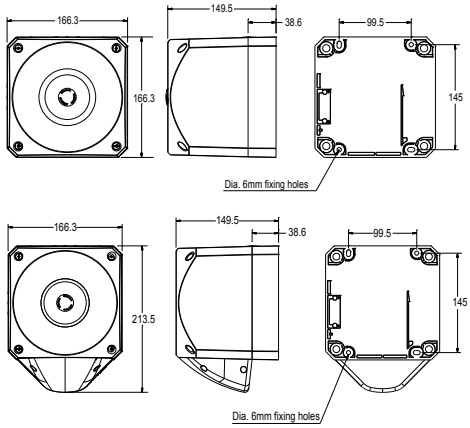

Specifications

Part No.	Lens Colour	Beacon Type	Audibility at 1m	Tones (Up to)	Voltage	Sounder Current	Beacon Current	Messages
PNV-0001	-	Sounder only	116dB (A)	64	24V DC	30mA (max)	-	7
PNV-0006	Red lens	LED beacon	Up to 116dB (A)	64	24V DC	30mA (max)	18mA/65mA**	7
PNV-0007	Amber lens	LED beacon	Up to 116dB (A)	64	24V DC	30mA (max)	18mA/65mA**	7
PNV-0008	Green lens	LED beacon	Up to 116dB (A)	64	24V DC	30mA (max)	18mA/65mA**	7
PNV-0009	Blue lens	LED beacon	Up to 116dB (A)	64	24V DC	30mA (max)	18mA/65mA**	7
PNV-0010	Clear lens	LED beacon	Up to 116dB (A)	64	24V DC	30mA (max)	18mA/65mA**	7
PNV-0011	Red lens	Xenon beacon	Up to 116dB (A)	64	24V DC	30mA (max)	330mA@24V DC	7
PNV-0012	Amber lens	Xenon beacon	Up to 116dB (A)	64	24V DC	30mA (max)	330mA@24V DC	7
PNV-0013	Green lens	Xenon beacon	Up to 116dB (A)	64	24V DC	30mA (max)	330mA@24V DC	7
PNV-0014	Blue lens	Xenon beacon	Up to 116dB (A)	64	24V DC	30mA (max)	330mA@24V DC	7
PNV-0015	Clear lens	Xenon beacon	Up to 116dB (A)	64	24V DC	30mA (max)	330mA@24V DC	7

** Flashing/Static current consumption figures.

IP Rating: IP66 **Operating Temp:** -25°C to +70°C **Cable Entries:** 5 **Weight:** Sounder 1.1kg; Sounder Beacon 1.2kg

Voice Sounders

Nexus Voice Sounder (AC)

Nexus voice sounders combine normal sounder signals with a clear, synchronised voice message to help reduce confusion and distress during an active alarm.

Standard units are available with 4 pre-programmed messages, selected from an extensive message library covering almost any conceivable application. Bespoke messages are also available on request.

All Nexus voice sounders have a USB interface that allows special messages in WAV format to be downloaded onto the sounder from any PC, providing users with the flexibility of adding/removing messages in-house.

Features

- **Choice of up to 4 messages**
- **Extensive message library or bespoke messages available**
- **Download messages in-house via built in USB port**
- **Max 116dB (A) tone and 90dB (A) message outputs**
- **Automatic synchronisation**
- **Robust construction; IP66 rated for outdoor environments**
- **Volume control - 20dB**
- **Separate connections for sounder & beacon**



Applications - Industrial alarm, Process control alarm

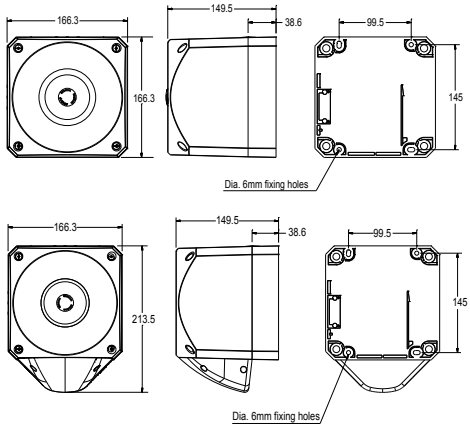

Specifications

Part No.	Lens Colour	Beacon Type	Audibility at 1m (typical)	Tones (Up to)	Voltage (50/60Hz)	Sounder Current	Beacon Current	Messages
PNV-0016	-	Sounder Only	Up to 116dB (A)	64	110/230V AC	30mA (max)	-	4
PNV-0018	Red lens	Xenon beacon	Up to 116dB (A)	64	110/230V AC	30mA (max)	70mA	4
PNV-0019	Amber lens	Xenon beacon	Up to 116dB (A)	64	110/230V AC	30mA (max)	70mA	4
PNV-0020	Green lens	Xenon beacon	Up to 116dB (A)	64	110/230V AC	30mA (max)	70mA	4
PNV-0021	Blue lens	Xenon beacon	Up to 116dB (A)	64	110/230V AC	30mA (max)	70mA	4
PNV-0030	Clear lens	Xenon beacon	Up to 116dB (A)	64	110/230V AC	30mA (max)	70mA	4

IP Rating: IP66 **Operating Temp:** -25°C to +55°C **Cable Entries:** 5 **Weight:** Sounder 1.1kg; Sounder Beacon 1.2kg

Nexus 2-Wire Voice Sounder Beacon

Nexus voice sounders combine normal sounder signals with a clear, synchronised voice message to help reduce confusion and distress during an active alarm.

The Nexus 2-Wire Voice sounder beacon has been specifically deigned to be used with either the Message controller (see page 28).

Available with 4 pre-programmed messages. Alternative messages can be selected from an extensive message library covering almost any conceivable application. Customised messages are also available on request.

All Nexus voice sounders have a USB port that allows special messages in WAV format to be downloaded onto the sounder from any PC, providing users with the flexibility of adding/removing messages in-house.

Features

- **Choice of up to 7 messages over a two core cable**
- **Extensive message library or bespoke messages available**
- **Download messages in-field via built in USB port**
- **110dB (A) tone and 90dB (A) message outputs**
- **Automatic synchronisation**
- **Robust construction; IP66 rated for outdoor environments**
- **Volume control - 20dB**
- **Separate connections for sounder & beacon**



Applications - Industrial alarm

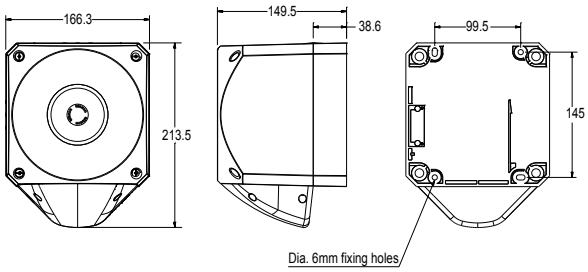

Specifications

Part No.	Lens Colour	Beacon Type	Audibility (tone) at 1m (typical)	Tones (Up to)	Voltage	Sounder Current	Beacon Current
PNV-0003	Red Lens	LED beacon	110dB (A)	64	24V DC	30mA (max)	18mA/65mA**

** Flashing/Static current consumption figures.

Note: Must be used with PNV-0005

IP Rating: IP66 **Operating Temp:** -25°C to +70°C **Cable Entries:** 5 **Weight:** Sounder Beacon 1.2kg

Voice Sounders

Message Controller

When combined with a Message controller, voice sounders can transmit upto 7 messages via a simple two-core cable.

The control unit has two status indication LED's mounted on its front face; a green 'System Health' indicator and an amber 'fault indicator'.

Features

- **Enables voice sounders to transmit up to 7 messages via a two-core cable**
- **Fully synchronised voice messages**
- **System health indicators**
- **Simple operation**
- **Compatible with any of the Sonos Voice Sounders and the Nexus red LED voice sounder beacon (PNV-0003)**



Applications - General signalling

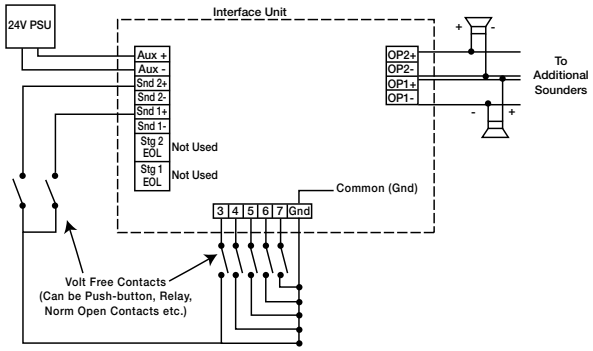

Specifications

Part No.	Description	Messages	Voltage	Quiescent Current	Alarm Current	Sounder Load
PNV-0005	Control Unit	Up to 7	17-28V DC	16mA	45mA	2A

IP Rating: Indoor **Operating Temp:** -25°C to +70°C **Construction:** Polycarb Flame Retardant **Weight:** 0.48Kg
Dimensions: 131mm W x 178mm H x 60.5mm D

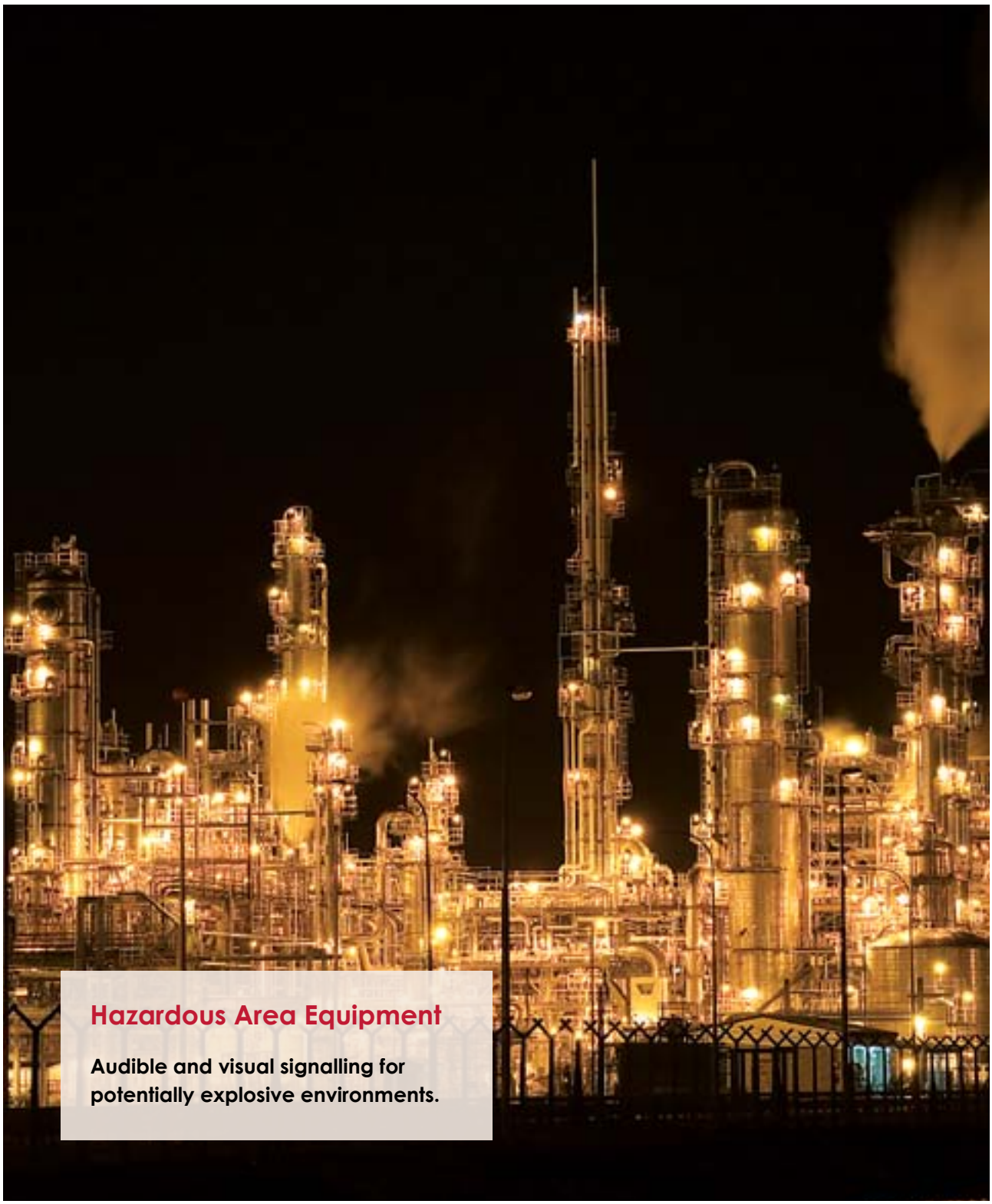

Hazardous Area Equipment

Audible and visual signalling for potentially explosive environments.

EXD-3 Sounder

The Exd-3 is an electronic sounder designed for potentially explosive atmospheres and harsh environmental conditions. Certified to II 2G EExd IIC T4, it is suitable for use in Zone 1 and 2 areas.

With a high degree of ingress protection (IP67) and a choice of tones including those covering PFEER/UKOOA requirements, it is suitable for use in almost any application. The standard version gives the user a choice of the 1st stage alarm tone with stages 2 and 3 fixed at manufacture. A 4-stage fully programmable version is also available on request.

The unit is fitted with two 20mm cable entries and has terminals that accept 4mm² cable for ease of installation. Dual In/Out terminals are also available on request. A dust proof version of the Exd-3 is also available.

Voice enhanced variant available on request.

Features

- **ATEX / IECEx Approved**
- **Rated for Category 2 use (formerly Zone 1 & 2)**
- **II 2G Exd IIC T4**
- **High sound output up to 117dB (A)**
- **Choice of 32 tones**
- **Weatherproof to IP67**
- **Volume control**
- **Exde version available on request**

VdS



Applications - Onshore/offshore alarm; fire alarm; evacuation control; process control alarm

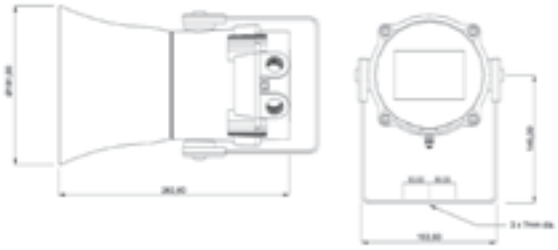

Specifications

Part No.	Colours	Audibility (tone) at 1m (typical)	Tones (Up to)	Voltage	Current (tone dependent)
TCA-0010	Red	Up to 117dB (A)	32	230V AC 50Hz	56mA
TCA-0011	Red	Up to 117dB (A)	32	110V AC 50Hz	93mA
TCA-0012	Red	Up to 117dB (A)	32	24V DC	265mA

IP Rating: IP67 **Operating Temp:** -50°C to +55°C **Construction:** Marine Grade LM6 Aluminium **Cable Entries:** 2 **Weight:** 3.4kg

EXD Beacon

The Exd Beacon is a powerful xenon beacon designed for use in hazardous area applications. Certified to II 2G Exd IIC T6, it is suitable for use in Zone 1 and Zone 2 areas. With a choice of six lens colours (red, amber, yellow, blue, green and clear), a high degree of ingress protection (IP67) and rugged design, it is suitable for use in almost any application.

The standard version has a 5 Joule output and 10 Joule and 15 Joule versions are available on request. The unit is fitted with two 20mm cable entries and has terminals that accept 4mm² cable for ease of installation. Dual In/Out terminals are also available on request.

A dust proof version of the Exd Beacon is also available.

Features

- **Rated for Category 2 use (formerly Zone 1 & 2)**
- **ATEX / IECEx Approved**
- **II 2G Exd IIC T6**
- **5 Joule output**
- **Lens guard fitted as standard**
- **Weatherproof to IP67**
- **10J and 15J versions available on request**

Lens Colour Options





Applications - Onshore/offshore alarm; fire alarm, evacuation control; process control alarm

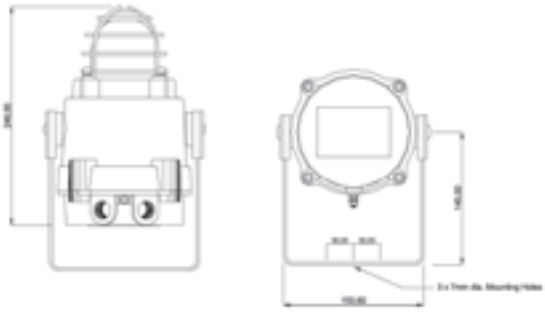

Specifications

Part No.	Colours	Light Output	Voltage	Current
TCA-0014	Red body, red lens	5J	230V AC 50Hz	55mA
TCA-0068	Red body, red lens	5J	110V AC 50Hz	140mA
TCA-0015	Red body, red lens	5J	24V DC	300mA
TCA-0017	Red body, amber lens	5J	230V AC 50Hz	55mA
TCA-0018	Red body, amber lens	5J	110V AC 50Hz	140mA
TCA-0019	Red body, amber lens	5J	24V DC	300mA

IP Rating: IP67 **Operating Temp:** -50°C to +40°C **Construction:** Marine Grade LM6 Aluminium **Cable Entries:** 2 **Weight:** 2.45kg

EXD Bell

The Exd Bell is designed for use in Zone 1 and 2 areas and for areas requiring a high degree of weatherproof protection. IP66 rated and certified to ATEX II 2G Exd e IIC T6, it can be used in almost any environment.

With a sound output of up to 105dB, it provides a clear signal which stands out against background noise. A telephone ringing version is also available.

The housing is manufactured from glass fibre reinforced polyester with stainless steel fittings designed to cope in arduous conditions. In addition, all DC versions are equipped with a non-wearing electronic contact breaker which gives a long and reliable life.

Features

- **Rated for Category 2 use (formerly Zone 1 & 2)**
- **ATEX approved**
- **II 2G Exd e IIC T6**
- **Clear audible signal designed to penetrate background noise**
- **Weatherproof to IP66**
- **Rugged construction**
- **Choice of voltages**



Applications - General signalling; telephone ringing; fire and process control alarm

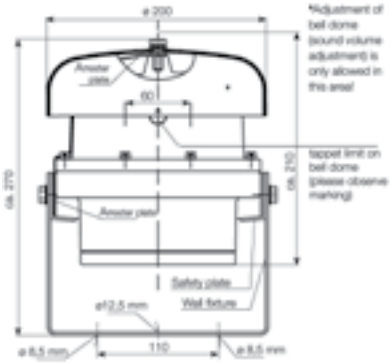

Specifications

Part No.	Colours	Audibility (tone) at 1m (typical)	Tones (Up to)	Voltage (50/60Hz)	Current (tone dependent)
TCA-0002	Black/grey	Up to 105dB (A)	1	230V AC	60mA
TCA-0003	Black/grey	Up to 105dB (A)	1	110V AC	140mA
TCA-0004	Black/grey	Up to 105dB (A)	1	24V DC	320mA

IP Rating: IP66 **Operating Temp:** -20°C to +40°C **Construction:** Glass Fibre Reinforced Polyester **Cable Entries:** 1 **Weight:** 3.5kg

EXD Buzzer

The Exd Buzzer is an explosion proof buzzer designed for use in hazardous areas where a distinctive signal is required. Certified to ATEX II 2G Exd e IIC T6, it is suitable for use in Zone 1 and Zone 2 areas.

Producing a tone with low frequency, it cuts through background noise more effectively than many other devices of a similar output.

Mounted in a rugged reinforced polyester case and weatherproof to IP66, it is suitable for use in the most arduous conditions.

Features

- **Rated for Category 2 use (formerly Zone 1 & 2)**
- **ATEX approved**
- **II 2G Exd e IIC T6**
- **Heavy duty buzzer**
- **Weatherproof to IP66**
- **Rugged construction**



Applications - General signalling; evacuation and process control alarm

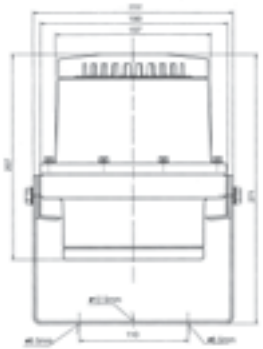

Specifications

Part No.	Colours	Audibility (tone) at 1m (typical)	Tones (Up to)	Voltage (50/60Hz)	Current (tone dependent)
TCA-0001	Black	Up to 105dB (A)	1	230V AC 50Hz	70mA
TCA-0069	Black	Up to 105dB (A)	1	110V AC 50Hz	150mA
TCA-0005	Black	Up to 105dB (A)	1	24V DC	650mA

IP Rating: IP66 **Operating Temp:** -20°C to +40°C **Construction:** Glass Fibre Reinforced Polyester **Cable Entries:** 1 **Weight:** 3.5kg

FP2C Siren

The FP2C is a powerful motor driven siren for use in hazardous area applications and harsh environmental conditions. It produces a siren sound which is easily recognisable and is often used for critical alarms such as toxic gas release.

Manufactured from cast aluminium, it is designed for a long life in outdoor locations and is suitable for signalling on chemical and petrochemical installations.

Certified to II 2 G EExd IIB T6, it is suitable for Category 1 use.

Using appropriate control equipment, the siren can produce two distinct tones.

Features

- **Rated for Category 2 use (formerly Zone 1 & 2)**
- **ATEX / IECEx Approved**
- **II 2G Exd IIB T6**
- **High output siren sound (123dB)**
- **Rugged weatherproof construction**



Applications - Evacuation alarm; fire alarm; toxic gas release; general purpose alarm

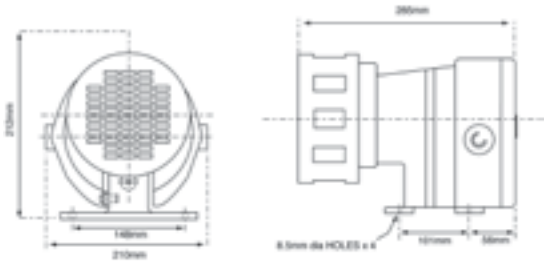

Specifications

Part No.	Colours	Audibility (tone) at 1m (typical)	Tones (Up to)	Voltage (50/60Hz)	Current (tone dependent)
SWG-0010	Red	Up to 123 dB (A)	2	110V AC	3.7A
SWG-0003	Red	Up to 123 dB (A)	2	230V AC	2.3A

IP Rating: IP55 **Frequency:** 850Hz **Operating Temp:** -20°C to +40°C **Construction:** Cast Aluminium **Cable Entries:** 1 **Weight:** 10kg



Motor Driven Sirens

Robust, high sound output sirens for areas with high background noise and harsh environmental conditions.

Motor Driven Sirens

Mini Mono P

The Mini Mono P is a small motor driven siren designed for fire and general alarm signalling.

Designed for ease of mounting, it has a separate mounting plate which connects to the main body with a bayonet locking action and has a locking screw for additional security.

The mounting plate is suitable for surface mounting or for use with a conduit (BESA) box depending on installation requirements.

Features

- **High quality siren sound**
- **Bayonet mounting plate for ease of installation**
- **Choice of voltages**
- **Low voltage DC and high voltage AC for use in all applications**



Applications - Fire alarm; general purpose alarm; process control; time signalling

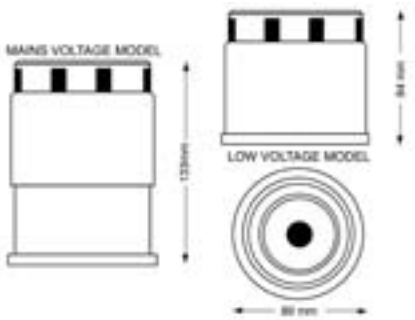

Specifications

Part No.	Colours	Audibility (tone) at 1m (typical)	Tones (Up to)	Voltage	Current
SLE-0002	Grey	Up to 103dB (A)	1	24V DC	500mA
SLE-0004	Grey	Up to 103dB (A)	1	110/230V AC	130/90mA

IP Rating: IP44 **Rating:** Continuous **Frequency:** 1000Hz **Operating Temp:** -30°C to +55°C
Construction: High Impact ABS **Cable Entries:** 1 **Weight:** Mini Mono P (DC) 0.2kg; Mini Mono P (AC) 0.5kg

Mono 72

The Mono 72 is a powerful motor driven siren which produces a clear, high output siren sound.

With its weatherproof design, the Mono 72 can be used both indoors and outdoors for general safety warning.

Due to its rugged construction, the Mono 72 can be used in arduous conditions including mining and quarrying applications.

Features

- **High output siren sound (120dB)**
- **Rugged construction for use in all environments**
- **Weatherproof to IP65**
- **Mounting bracket for ease of installation**



Applications - General safety warning; conveyors; process control alarm; vehicle alarm

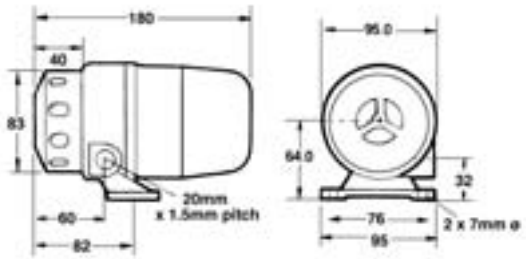

Specifications

Part No.	Colours	Audibility (tone) at 1m (typical)	Tones (Up to)	Voltage (50/60Hz)	Current
SLA-0001	Red/Black	Up to 120 dB (A)	1	110V AC/DC	1A(AC)/0.8A(DC)
SLA-0002	Red/Black	Up to 120 dB (A)	1	230V AC/DC	0.5A(AC)/0.4A(DC)

IP Rating: IP65 **Rating:** Continuous **Frequency:** 1800Hz **Operating Temp:** -30°C to +45°C
Construction: Cast Aluminium Body, ABS Rotor, Stator and Cover **Cable Entries:** 1 **Weight:** 1.7kg

Motor Driven Sirens

Duplo

The Duplo is a powerful motor driven siren which produces a very high sound output despite its physically compact construction.

With its weatherproof design, the Duplo can be used both indoors and outdoors for general safety warning.

Due to its rugged construction, the Duplo be used in arduous conditions including mining and quarrying applications.

Features

- **High output siren sound (127dB)**
- **Rugged construction for use in all environments**
- **Long life and run time**
- **Weatherproof to IP65**
- **Mounting bracket for ease of installation**



Applications - General safety warning; conveyors; process control alarm; vehicle alarm

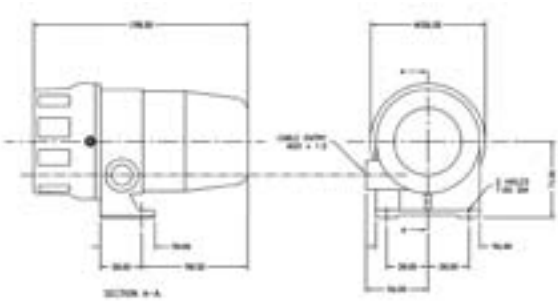

Specifications

Part No.	Colours	Audibility (tone) at 1m (typical)	Tones (Up to)	Voltage (50/60Hz)	Current (tone dependent)
SLB-0001	Grey/Black	Up to 127 dB (A)	1	110V AC/DC	2.7A
SLB-0002	Grey/Black	Up to 127 dB (A)	1	230V AC/DC	1.0A

IP Rating: IP65 **Rating:** Continuous **Frequency:** 1600Hz **Operating Temp:** -30°C to +45°C
Construction: Cast Aluminium Body, ABS Rotor, Stator and Cover **Cable Entries:** 1 **Weight:** 2kg

Super M

The Super M is a powerful motor driven siren which emits a very high sound output. Designed for surface mounting, it has a separate mounting bracket which may be secured in position first to allow for easy installation. In addition, it comes pre-wired with 1 metre of cable.

It has a weatherproof construction when wall mounted and is suitable for continuous use.

The Super M is ideal for applications where a higher sound output is required such as in areas of high background noise.

Features

- **High output siren sound (127dB)**
- **Separate mounting bracket for easy installation**
- **Long life and run time**
- **Weatherproof for use both indoors and outdoors**



Applications - General safety warning; conveyors; process control alarm; vehicle alarm

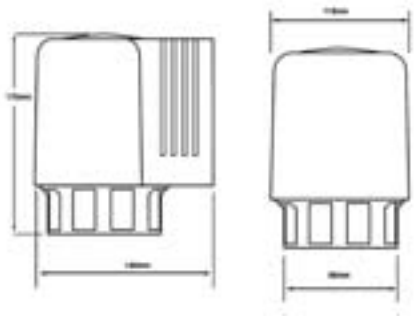

Specifications

Part No.	Colours	Audibility (tone) at 1m (typical)	Tones (Up to)	Voltage (50/60Hz)	Current (tone dependent)
SLD-0001	Yellow	Up to 127 dB (A)	1	110V AC/DC	2.7A
SLD-0002	Yellow	Up to 127 dB (A)	1	230V AC/DC	1.0A

IP Rating: Weatherproof **Rating:** Continuous **Frequency:** 1600Hz **Operating Temp:** -30°C to +45°C
Construction: ABS **Cable Entries:** 1 **Weight:** 1.8kg

Motor Driven Sirens

SO4

The SO4 is a weatherproof motor driven siren designed for vertical mounting and designed for outdoor warning over small/medium areas.

Manufactured from cast aluminium, it is rugged in construction, has a continuous rating and is built for a long life outdoors.

Features

- **High sound output (up to 125dB)**
- **Powerful low frequency sound**
- **Weatherproof to IP55**
- **Vertical siren for easy mounting**
- **Low voltage DC and high voltage AC variants**



Applications - Fire alarm; security alarm; general safety warning; conveyors; process control alarm; vehicle alarm

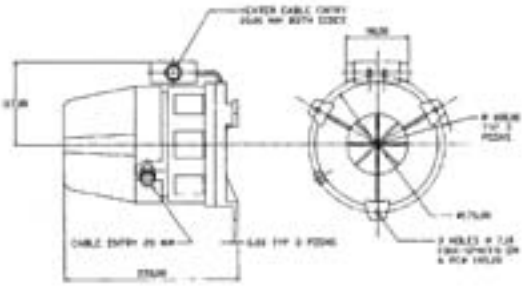

Specifications

Part No.	Colours	Audibility (tone) at 1m (typical)	Tones (Up to)	Voltage (50/60Hz)	Current (tone dependent)
SLC-0003	Grey	Up to 116 dB (A)	1	24V DC	8A
SLC-0001	Grey	Up to 125 dB (A)	1	110V AC/DC	3A(AC)/2.7A(DC)
SLC-0002	Grey	Up to 125 dB (A)	1	230V AC/DC	1.4A(AC)/1.2A(DC)

IP Rating: IP55 **Rating:** Continuous **Frequency:** 900Hz **Operating Temp:** -30°C to +45°C
Construction: Cast Aluminium Body **Cable Entries:** 1 **Weight:** 4.5kg



Hand Operated Sirens

Designed to provide warning in applications where there is no power supply.

Hand Operated Sirens

Lightweight Hand Operated Siren

The lightweight hand operated siren is designed to provide effective warning in applications where there is no power supply such as camp sites, civil defence, mountain rescue and coast guard warning.

The siren is lightweight, can be easily transported to remote locations and folds up to a small and compact size for ease of handling.

This model comes complete with carry case, making it the ideal choice where portability is crucial.

Features

- **No power supply required**
- **Lightweight model for portability**
- **Powerful low frequency sound**
- **Universally recognised signal**
- **Carry case included**
- **2 tones: continuous and warble**
- **116 dB @ 1 metre**



Applications - Camp sites; civil defence; mountain rescue; coast guard warning; quarries/ mining

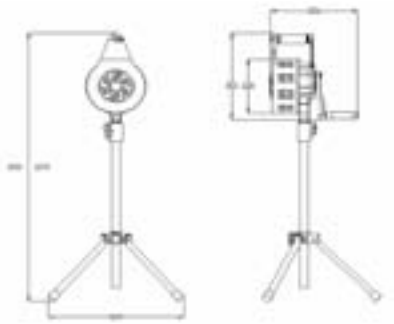

Maximum dimensions
Stand height: max 1m, min 0.6m
When folded: height 0.2m, base tripod 0.03m x 0.03m x 0.03m

Specifications

Part No.	Colours	Audibility (tone) at 1m (typical)	Tones (Up to)
SLF-0001	Black	Up to 116dB (A)	2

IP Rating: N/A **Rating:** Continuous **Frequency:** 600Hz Nominal (Dependent on Rotation Speed) **Dimensions:** See Diagram **Weight:** 4kg

Heavy Duty Hand Operated Siren

The heavy duty hand operated siren is designed to provide effective warning in applications where there is no power supply such as camp sites, civil defence, mountain rescue and coast guard warning.

Powered by rotating the handle, this siren has a plate to shut off the sound once up to speed giving it the ability to produce three different tones

Robust and compact, the siren can be easily transported to remote locations and folds up to a small size for ease of handling.

Features

- **No power supply required**
- **Robust and compact for portability**
- **Powerful low frequency sound**
- **Universally recognised signal**
- **Shutter mechanism to provide three or more signals**
- **120 dB @ 1 metre**



Applications - Camp sites; civil defence; mountain rescue; coast guard warning; quarries/ mining



Height: 84cm Width: 37cm
Depth: 48cm



Height: 60cm Width: 37cm
Depth: 48cm

Specifications

Part No.	Colours	Audibility (tone) at 1m (typical)	Tones (Up to)
SLF-0003	Grey	Up to 120dB (A)	3+

IP Rating: N/A **Rating:** Continuous **Frequency:** 400Hz Nominal (Dependent on Rotation Speed) **Dimensions:** See Diagram **Weight:** 11kg

Klaxon Signals is a brand of Texecom Ltd

www.klaxonsignals.com
Tel: +44 (0)1706 233879

Texecom Ltd
St Crispin Way
Haslingden
Lancashire
BB4 4PW
England

klaxon
Signalling Solutions

INS-0137-2