Brand of NTN corporation

Technical data

EXP206

Bearing units



Grey cast housing, radial insert ball bearing with eccentric locking collar, seal with slinger

KIT CONTENT

EX206G2, P206

VISUAL (S)

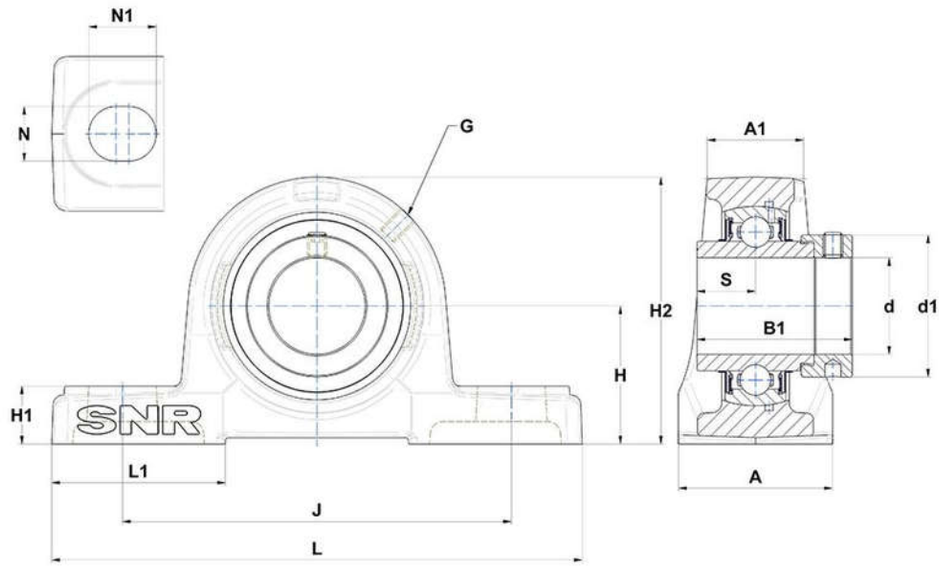

PRODUCT DEFINITION

Brand	SNR
A - Housing width	48 mm
A1 - Housing top width	30 mm
B - Width of Inner Ring	36,4 mm
d - Shaft diameter	30 mm
d1 - Outer dia of eccent. Lock. collar / nut of adapter sleeve	44,1 mm

EXP206
Bearing units

PRODUCT DEFINITION	
G - Grease fitting	M6x1
H - Distance mounting base to centerline spheric. seating diam.	42,9 mm
H1 - Housing foot height	18 mm
H2 - Housing height	83 mm
J - Mounting holes distance	121 mm
L - Housing length	165 mm
L1 - Housing foot length	54 mm
N - Mounting hole dimension	17 mm
N1 - Mounting hole length	21 mm
S - Distance front side/bearing centre	18,2 mm

PRODUCT PERFORMANCE	
C - Dynamic load rating	19500000 mN
C0 - Static load rating	11200000 mN
Operating temperature min.	253,15 °K
Operating temperature max.	373,15 °K

OTHER FEATURES	
Mass	1,45 kg
Recommended tightening torque for set screw	11.5 N-m