

FUSERBLOC

Fuse combination switches
for industrial fuses up to 1250 A



FUSERBLOC
630 to 1250 A



FUSERBLOC
32 to 400 A



FUSERBLOC
20 to 32 A

Function

FUSERBLOC are manually operated multipolar fuse combination switches. They make and break on load and provide safety isolation and protection against overcurrent for any low voltage electrical circuit.

Advantages

Improved safety
- Complete isolation of the fuse with double breaking per pole (top and bottom of fuse).
- Positive break indication.
- IP2X protection with terminal shrouds front panel.

High breaking capacity
Protection against overloads and short-circuits thanks to high breaking capacity fuses (100 kA rms).

Specific functionalities for simplified use
- TEST position for testing control circuits without energising the power poles using U-type auxiliary contacts. In TEST position, the enclosure door can be opened.
- Mechanical or electronic fuse melting detection system (see DDMM or FMD page 270).

Customised solutions

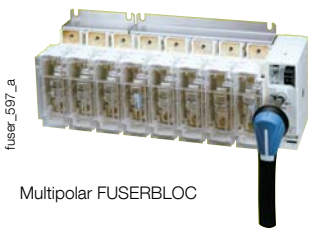

Multipolar FUSERBLOC



Centred operation

The solution for
- Motor load break
- Protection of industrial processes



Strong points
- Improved safety
- High breaking capacity
- Specific functionalities for simplified use

A complete range
- Centred or left side operation, rear connections, plug-in connections. Please consult us.

Conformity to standards
- IEC 60947-3
- EN 60947-3
- BS EN 60947-3
- NBN EN 60947-3
- IEC 60269-1
- DIN EN 60269-1
- NF EN 60269-1
- IEC 60269-2
- VDE 0636-1
- VDE 0660-107
- Standards UL: see FUSERBLOC UL

Approvals and certifications(1)

KEMA KEUR · CCC · LOVAG · Lloyd's Register

(1) Product reference on request.

socomec Innovative Power Solutions

What you need to know

- In addition to the FUSERBLOC rating, product selection also depends on the fuse characteristics and functional specifications, which need to be in accordance with the application. SOCOMEC FUSERBLOC are available for utilisation with **NFC, DIN or BS88 fuses.**

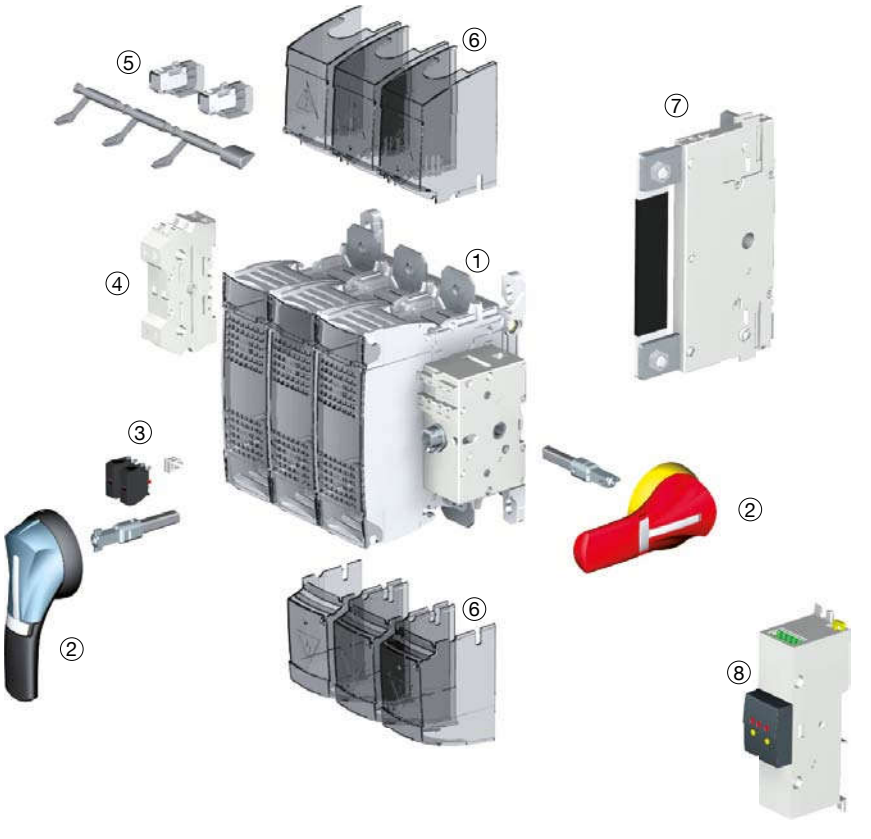

fuser_734_a_1_x_cat.ai

1. FUSERBLOC switch fuse
2. External front or side operation handle
3. U type auxiliary contact (pré-break and switch position signalling)
4. S and ST auxiliary equipment control and switch position signalling contacts
5. Melted fuse mechanical detection and indication device (DDMM)
6. Top and bottom terminal shrouds
7. Integrated solid neutral link
8. Electronic fuse monitoring device (FMD) detectes worked fuse and provides signals to operator, PLC or supervision systems. Compatible with BS88, DIN and UL fuse types.
   - LED visual indication
   - Bi-stable relay for PLC: alarm, remote device tripping, etc.
   - TEST button: any time functional product verification
   - FUSERBLOC direct mounting, either back plate, DIN-rail or door mounting

- Whether it is 3 pole + switched neutral or 3 pole + solid neutral, the **FUSERBLOC** 20 to 32 A with **direct front operation** and **external operation** is the best suited solution in compact design.

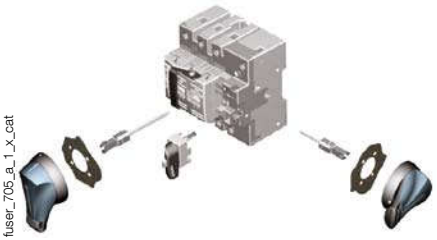

fuser_705_a_1_x_cat

- From 32 to 400 A, the FUSERBLOC is available in 2, 3 or 4 poles with **direct right side operation**.



fuser_706_a_2_cat

- For ratings 20 to 400 A, the **flat mounting kit** provides a compact solution ideally suited to withdrawable applications.
- Maintenance of outputs from the DC common bus.

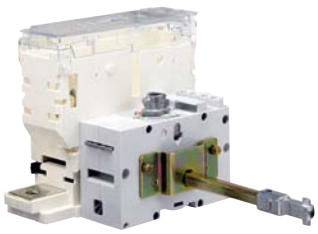

fuser_702_a_2_cat

References

BS 88 - External front and side operation - 20 to 160 A

Rating (A) Fuse size Frame size	Number of poles	Reference Switch I - 0 -TEST	Reference Changeover I - 0 - II	External front handle I - 0	TEST External front handle I - 0 - TEST	External right side handle I - 0	Changeover external front handle I - 0 - II	Shaft extensions for handle	Terminal shrouds[3]	U type A/C [2]	Integrated solid neutral link
CD 20 A A1 0	3 P	3641 **3000**	3680 **3000**	S1 type Black IP65 1413 **2111**[1] Red/Yellow IP65 1414 **2111**	S1 type Black IP65 1413 **2115**[1] Red/Yellow IP65 1414 **2115**	S1 type Black IP65 1417 **2111**[1] Red/Yellow IP65 1418 **2111**	S1 type Black IP65 1413 **2113**[1] Red/Yellow IP65 1414 **2113**	320 mm 1401 **0532**	IP2x as standard	1 contact NO 3999 **0701** 1 contact NC 3999 **0702**	
	3 P + switched neutral	3641 **4000**	3680 **4000**								
	3 P+solid neutral	3641 **5000**									
CD 32 A A1 0	3 P	3641 **3001**	3680 **3001**								
	3 P + switched neutral	3641 **4001**	3680 **4001**								
	3 P + solid neutral	3641 **5001**									
32 A A1 11	2 P	3841 **2003**						320 mm 1400 **1032**			3829 **9310**
	3 P	3841 **3003**	3880 **3003**								
	4 P	3841 **6003**	3880 **6003**								
63 A A2-A3 12	2 P	3841 **2006**									
	3 P	3841 **3006**	3880 **3006**								
	4 P	3841 **6006**	3880 **6006**								
100 A A4 [4] 13	2 P	3841 **2010**		S2 type Black IP65 1423 **2111**[1] Red/Yellow IP65 1424 **2111**	S2 type Black IP65 1423 **2115**[1] Red/Yellow IP65 1424 **2115**	S2 type Black IP65 1427 **2111**[1] Red/Yellow IP65 1428 **2111**	S2 type Black IP65 1421 **2113**[1] Red/Yellow IP65 1424 **2113**		2 P 3998 **2016** 3 P 3998 **3016** 4 P 3998 **4016**		
	3 P	3841 **3010**	3880 **3010**								
	4 P	3841 **6010**	3880 **6010**								
CD 160 A A3-A4 [4] 13 A	2 P	3841 **2014**									3829 **9320**
	3 P	3841 **3014**	3880 **3014**								
	4 P	3841 **6014**	3880 **6014**								
160 A A4 14	2 P	3841 **2015**									
	3 P	3841 **3015**	3880 **3015**								
	4 P	3841 **6015**	3880 **6015**								
160 A B1-B2 14	2 P	3841 **2016**									
	3 P	3841 **3016**	3880 **3016**								
	4 P	3841 **6016**	3880 **6016**								

(1) Standard.
(2) 4 auxiliary contacts as standard without additional contact holder.
(3) Top/bottom.
(4) For fuse size A4: max diameter 31 mm.

BS 88 - External front and side operation - 200 to 1250 A

Rating (A) Fuse size Frame size	Number of poles	Reference Switch I - 0 -TEST	Reference Changeover I - 0 - II	External front handle I - 0	TEST External front handle I - 0 - TEST	External right side handle I - 0	Changeover external front handle I - 0 - II	Shaft extensions for handle	Terminal shrouds[3]	U type A/C [2]	Integrated solid neutral link
CD 200 A A3-A4 (5) 13 A	2 P	3841 **2019**		S2 type Black IP65 1423 **2111**[1] Red/Yellow IP65 1424 **2111**	S2 type Black IP65 1423 **2115**[1] Red/Yellow IP65 1424 **2115**	S2 type Black IP65 1425 **2111**[1] Red/Yellow IP65 1428 **2111**	S2 type Black IP65 1422 **2113**[1] Red/Yellow IP65 1424 **2113**	320 mm 1400 **1032**	2 P 3998 **2016** 3 P 3998 **3016** 4 P 3998 **4016**	1 contact NO 3999 **0701** 1 contact NC 3999 **0702**	3829 **9320**
	3 P	3841 **3019**	3880 **3019**								
	4 P	3841 **6019**	3880 **6019**								
200 A B1-B2 15	2 P	3841 **2021**							2 P 3998 **2025** 3 P 3998 **3025** 4 P 3998 **4025**		3829 **9325**
	3 P	3841 **3021**	3880 **3021**								
	4 P	3841 **6021**	3880 **6021**								
250 A B1-B2-B3 15	2 P	3841 **2024**									
	3 P	3841 **3024**	3880 **3024**								
	4 P	3841 **6024**	3880 **6024**								
315 A B1-B2-B3 16	2 P	3841 **2031**							2 P 3898 **2040** 3 P 3898 **3040** 4 P 3898 **4040**		3829 **9339**
	3 P	3841 **3031**	3880 **3032**[6]								
	4 P	3841 **6031**	3880 **6032**[6]								
400 A B1-B2- B3-B4 16	2 P	3841 **2038**									
	3 P	3841 **3038**									
	4 P	3841 **6038**									
630 A C1-C2 17	2 P	3821 **2063**		S3 type Black IP65 1433 **3111**[1] Red/Yellow IP65 1434 **3111**		S3 type Black IP65 1437 **3111**[1] Red/Yellow IP65 1438 **3111**		320 mm 1400 **1232**	2 P 3898 **2080** 3 P 3898 **3080** 4 P 3898 **4080**		3829 **9308**
	3 P	3821 **3063**									
	4 P	3821 **6063**									
800 A C1-C2-C3 17	2 P	3821 **2080**									
	3 P	3821 **3080**									
	4 P	3821 **6080**									
1250 A D1 18	2 P	3821 **2120**		S4 type Black IP65 1443 **3111**[1]					3898 **2120**		3829 **9312**
	3 P	3821 **3120**							3898 **3120**		
	4 P	3821 **6120**							3898 **4120**		

(1) Standard.
(2) 4 auxiliary contacts as standard without additional contact holder.
(3) Top/bottom.
(4) 8 AC as standard without support (the support is for 8 additional auxiliary contacts).
(5) For fuse size A4: max diameter 31 mm.
(6) Terminal shrouds: 3 P - 3998 3025, 4 P - 3998 4025.

References (continued)

BS 88 - Direct operation - 20 to 160 A

Rating (A) Fuse size Frame size	Number of poles	Reference Side direct operation	Reference Direct front operation	Side direct handle	Direct front handle	Auxiliary contacts	Terminal shrouds[3]	Cage terminals	Handle key interlocking accessories[2]
CD 20 A A1 0	3 P		3641 **3000**		Black 3629 **4012**	1 contact NO/NC A-type 3999 **0001**[1] 2 contacts NO/NC A-type 3999 **0002**[1]	IP2x as standard	Standard	
	3 P + switched neutral		3641 **4000**						
	3 P + solid neutral		3641 **5000**						
CD 32 A A1 0	3 P		3641 **3001**						
	3 P + switched neutral		3641 **4001**						
	3 P + solid neutral		3641 **5001**						
32 A A1 1	2 P	3625 **2003**	consult us	Black 3629 **7900**					3629 **7903**
	3 P	3625 **3003**	consult us						
	4 P	3625 **6003**	consult us						
63 A A2-A3 2	2 P	3625 **2006**	consult us						
	3 P	3625 **3006**	consult us						
	4 P	3625 **6006**	consult us						
100 A A4 [4] 3	2 P	3625 **2010**	consult us	Black 3629 **7901**		1 contact NO/NC A-type 3999 **0021**[1] 2 contacts NO/NC A-type 3999 **0022**[1]	2 P 3998 **2016** 3 P 3998 **3016** 4 P 3998 **4016**	3 P 5400 **3016** 4 P 5400 **4016**	3629 **7913**
	3 P	3625 **3010**	consult us						
	4 P	3625 **6010**	consult us						
CD 160 A A3-A4 [4] 3 A	2 P	3625 **2014**	consult us						
	3 P	3625 **3014**	consult us						
	4 P	3625 **6014**	consult us						
160 A A4 4	2 P	3625 **2015**	consult us						
	3 P	3625 **3015**	consult us						
	4 P	3625 **6015**	consult us						
160 A B1-B2 4	2 P	3625 **2016**	consult us						
	3 P	3625 **3016**	consult us						
	4 P	3625 **6016**	consult us						

(1) Max. 2 contacts.
(2) Lock not included.
(3) Top/bottom.
(4) For fuse size A4: max diameter 31 mm.

BS 88 - Direct operation - 200 to 400 A

Rating (A) Fuse size Frame size	Number of poles	Reference Side direct operation	Reference Direct front operation	Side direct handle	Direct front handle	Auxiliary contacts	Terminal shrouds[3]	Cage terminals	Handle key interlocking accessories[2]
CD 200 A A3-A4 [4] 13 A	2 P	3625 **2019**	consult us	Black 3629 **7901**	consult us	1 contact NO/NC A-type 3999 **0021**[1] 2 contacts NO/NC A-type 3999 **0022**[1]	2 P 3998 **2016** 3 P 3998 **3016** 4 P 3998 **4016**	3 P 5400 **3016** 4 P 5400 **4016**	3629 **7913**
	3 P	3625 **3019**	consult us						
	4 P	3625 **6019**	consult us						
200 A B1-B2 5	2 P	3625 **2021**	consult us						
	3 P	3625 **3021**	consult us						
	4 P	3625 **6021**	consult us						
250 A B1-B2-B3 5	2 P	3625 **2024**	consult us				2 P 3998 **2025** 3 P 3998 **3025** 4 P 3998 **4025**	3 P 5400 **3025** 4 P 5400 **4025**	
	3 P	3625 **3024**	consult us						
	4 P	3625 **6024**	consult us						
315 A B1-B2-B3 6	2 P	3625 **2032**	consult us					3 P 5400 **3040** 4 P 5400 **4040**	
	3 P	3625 **3032**	consult us						
	4 P	3625 **6032**	consult us						
400 A B1-B2-B3-B4 6	2 P	3625 **2039**	consult us						
	3 P	3625 **3039**	consult us						
	4 P	3625 **6039**	consult us						

(1) Max. 2 contacts.
(2) Lock not included.
(3) Top/bottom.
(4) For fuse size A4: max diameter 31 mm.

BS 88 - Direct operation - 630 to 1250 A

Rating (A) Fuse size Frame size	Number of poles	Reference Side direct operation	Reference Direct front operation	Side direct handle	Direct front handle	Auxiliary contacts	Terminal shrouds[3]	Cage terminals	Handle key interlocking accessories[2]
630 A C1-C2 17	2 P	3821 **2063**	3821 **2063**	S3 type Black 3899 **7911** + 1437 **3111**	Black 3899 **6011**	1 contact NO U-type 3999 **0701**[1] 1 contact NC U-type 3999 **0702**[1]	2 P 3898 **2080** 3 P 3898 **3080** 4 P 3898 **4080**		
	3 P	3821 **3063**	3821 **3063**						
	4 P	3821 **6063**	3821 **6063**						
800 A C1-C2-C3 17	2 P	3821 **2080**	3821 **2080**						
	3 P	3821 **3080**	3821 **3080**						
	4 P	3821 **6080**	3821 **6080**						
1250 A D1 18	2 P	3821 **2120**	3821 **2120**		Black 3899 **7011**		3898 **2120**		
	3 P	3821 **3120**	3821 **3120**				3898 **3120**		
	4 P	3821 **6120**	3821 **6120**				3898 **4120**		

(1) Max.number of U-type auxiliary contacts is 8.
(2) Lock not included.
(3) Top/bottom.

References

NFC and DIN - External front and right side operation - 25 to 125 A

Rating (A) / Fuse / Frame size	No. of poles	Switch I - 0 - TEST	Changeover switch I - 0 - II	External front handle	TEST external front handle	External right side handle	Changeover external front handle	Shaft for external handle	Auxiliary contacts[3]	Terminal shrouds[2]	Integrated solid neutral link
CD 25 A 10 x 38 0	3 P	3631 **3002**[1]	3670 **3002**								
	3 P + switched neutral	3631 **4002**[1]	3670 **4002**								
	3 P + solid neutral	3631 **5002**[1]									
CD 32 A 10 x 38 0	3 P	3631 **3003**	3670 **3003**								
	3 P + switched neutral	3631 **4003**	3670 **4003**					320 mm 1401 **0532**			
	3 P + solid neutral	3631 **5003**		S1 type	S1 type	S1 type	S1 type				
CD 32 A 14 x 51 0	3 P	3631 **3004**[1]	3670 **3004**	Black IP65 1413 **2111**	Black IP65 1413 **2115**	Black IP65 1417 **2111**	Black IP65 1413 **2113**			IP2x as standard	
	3 P + switched neutral	3631 **4004**[1]	3670 **4004**	Red/Yellow IP65 1414 **2111**	Red/Yellow IP65 1414 **2115**	Red/Yellow IP65 1418 **2111**	Red/Yellow IP65 1414 **2113**				
	3 P + solid neutral	3631 **5004**[1]									
50 A 14 x 51 11	2 P	3831 **2005**							U-type 1 contact NO 3999 **0701** 1contact NC 3999 **0702**		
	3 P	3831 **3005**[1]	3870 **3005**								
	4 P	3831 **6005**[1]	3870 **6005**								
63 A 00C 12	2 P	3831 **2006**									
	3 P	3831 **3006**[1]	3870 **3006**								
	4 P	3831 **6006**[1]	3870 **6006**								
100 A 22 x 58 13	2 P	3831 **2010**									
	3 P	3831 **3010**[1]	3870 **3010**					320 mm 1400 **1032**[2]			
	4 P	3831 **6010**[1]	3870 **6010**	S2 type	S2 type	S2 type	S2 type				
125 A 22 x 58 13	2 P	3831 **2011**		Black IP65 1423 **2111**	Black IP65 1423 **2115**	Black IP65 1427 **2111**	Black IP65 1423 **2113**			2 P 3998 **2016** 3 P 3998 **3016** 4 P 3998 **4016**	3829 **9310**
	3 P	3831 **3011**	3870 **3011**								
	4 P	3831 **6011**	3870 **6011**	Red/Yellow IP65 1424 **2111**	Red/Yellow IP65 1424 **2115**	Red/Yellow IP65 1428 **2111**	Red/Yellow IP65 1424 **2113**				
125 A 00 13	2 P	3831 **2012**									
	3 P	3831 **3012**	3870 **3012**								
	4 P	3831 **6012**	3870 **6012**								

(1) Available enclosed (see page "Enclosed fuse switches" page 730).
(2) Top/bottom.
(3) Maximum 4 contacts.

NFC and DIN - External front and right side operation - 160 to 1250 A

Rating (A) / Fuse / Frame size	No. of poles	Switch I - TEST	Changeover switch I - 0 - II	External front handle	TEST external front handle	External right side handle	Changeover external front handle	Shaft for external handle	Auxiliary contacts[3]	Terminal shrouds[2]	Integrated solid neutral link
160 A 00 13	2 P	3831 **2015**		S2 type Black IP65 1423 **2111** Red/Yellow IP65 1424 **2111**	S2 type Black IP65 1423 **2115** Red/Yellow IP65 1424 **2115**	S2 type Black IP65 1427 **2111** Red/Yellow IP65 1428 **2111**	S2 type Black IP65 1423 **2113** Red/Yellow IP65 1424 **2113**	320 mm 1400 **1032**	U-type 1 contact NO 3999 **0701** 1 contact NC 3999 **0702**	2 P 3998 **2016** 3 P 3998 **3016** 4 P 3998 **4016**	3829 **9320**
	3 P	3831 **3015**	3870 **3015**								
	4 P	3831 **6015**	3870 **6015**								
160 A 0 14	2 P	3831 **2016**									
	3 P	3831 **3016**[1]	3870 **3016**								
	4 P	3831 **6016**[1]	3870 **6016**								
250 A 1 15	2 P	3831 **2024**								2 P 3998 **2025** 3 P 3998 **3025** 4 P 3998 **4025**	3829 **9325**
	3 P	3831 **3024**[1]	3870 **3024**								
	4 P	3831 **6024**[1]	3870 **6024**								
400 A 2 16	2 P	3831 **2038**								2 P 3898 **2040** 3 P 3898 **3040** 4 P 3898 **4040**	3829 **9339**
	3 P	3831 **3038**[1]	3870 **3039**[4]								
	4 P	3831 **6038**[1]	3870 **6039**[4]								
630 A 3 17	2 P	3811 **2063**		S3 type Black IP65 1433 **3111** Red/Yellow IP65 1434 **3111**		S3 type Black IP65 1437 **3111** Red/Yellow IP65 1438 **3111**		320 mm 1400 **1232**		2 P 3898 **2080** 3 P 3898 **3080** 4 P 3898 **4080**	3829 **9308**
	3 P	3811 **3063**[1]									
	4 P	3811 **6063**[1]									
800 A 3 17	2 P	3811 **2080**									
	3 P	3811 **3080**									
	4 P	3811 **6080**									
800 A 4 18	2 P	3811 **2081**		S4 type Black IP65 1443 **3111** Red/Yellow IP65 1444 **3111**						2 P 3898 **2120** 3 P 3898 **3120** 4 P 3898 **4120**	3829 **9312**
	3 P	3811 **3081**									
	4 P	3811 **6081**									
1250 A 4 18	2 P	3811 **2120**									
	3 P	3811 **3120**									
	4 P	3811 **6120**									

(1) Available enclosed (see "Enclosed fuse switches" page 730).
(2) Top/bottom.
(3) Maximum 4 contacts.
(4) Terminal shrouds: 3 P - 3998 3025, 4 P - 3998 4025.

References (continued)

NFC and DIN - Direct operation - 25 to 125 A

Rating (A) Fuse size Frame size	No. of poles	Direct side operation	Direct front operation	Direct handle	Auxiliary contacts	Terminal shrouds	Cage terminals	Lock for fuse protection cover	Handle key interlocking accessories[6]
CD 25 A 10 x 38 0	3 P		3631 **3002**	Black 3629 **4012**[1][2]	A-type 1 contact NO/NC 3999 **0001**[3] A-type 2 contacts NO/NC 3999 **0002**[3].	IP2x as standard	Standard	Standard	3629 **7903**
	3 P + switched neutral		3631 **4002**						
	3 P + solid neutral		3631 **5002**						
CD 32 A 10 x 38 0	3 P		3631 **3003**						
	3 P + switched neutral		3631 **4003**						
	3 P + solid neutral		3631 **5003**						
CD 32 A 14 x 51 0	3 P		3631 **3004**						
	3 P + switched neutral		3631 **4004**						
	3 P + solid neutral		3631 **5004**						
50 A 14 x 51 1	2 P	3615 **2005**	consult us	Black 3629 **7900**[5][2]	A-type 1 contact NO/NC 3999 **0021**[3] A-type 2 contacts NO/NC 3999 **0022**[3]				
	3 P	3615 **3005**	consult us						
	4 P	3615 **6005**	consult us						
63 A 00C 2	2 P	3615 **2006**	consult us					3999 **8906**	
	3 P	3615 **3006**	consult us						
	4 P	3615 **6006**	consult us						
100 A 22 x 58 3	2 P	3615 **2010**	consult us	Black 3629 **7901**[5][2]		2 P 3998 **2016**[4] 3 P 3998 **3016**[4] 4 P 3998 **4016**[4]	3 P 5400 **3016** 4 P 5400 **4016**	3999 **8912**	3629 **7913**
	3 P	3615 **3010**	consult us						
	4 P	3615 **6010**	consult us						
125 A 22 x 58 3	2 P	3615 **2011**	consult us						
	3 P	3615 **3011**	consult us						
	4 P	3615 **6011**	consult us						
125 A 00 3	2 P	3615 **2012**	consult us						
	3 P	3615 **3012**	consult us						
	4 P	3615 **6012**	consult us						

(1) Direct front operation.
(2) Standard.
(3) Maximum 2 contacts.
(4) Top or bottom.
(5) Direct right side operation.
(6) Locking using RONIS EL11AP lock (lock not included).

NFC and DIN - Direct operation - 160 to 400 A

Rating (A) Fuse size Frame size	No. of poles	Direct side operation	Direct front operation	Direct handle	Auxiliary contacts	Terminal shrouds	Cage terminals	Lock for fuse protection cover	Handle key interlocking accessories[5]
160 A 00 3	2 P	3615 **2015**	consult us	Black 3629 **7901**[4][1]	A-type 1 contact NO/NC 3999 **0021**[2] A-type 2 contacts NO/NC 3999 **0022**[2]	2 P 3998 **2016**[3] 3 P 3998 **3016**[3] 4 P 3998 **4016**[3]	3 P 5400 **3016** 4 P 5400 **4016**	3999 **8912**	3629 **7913**
	3 P	3615 **3015**	consult us						
	4 P	3615 **6015**	consult us						
160 A 0 4	2 P	3615 **2016**	consult us	Black 3629 **7901**[4][1]				3999 **8216**	
	3 P	3615 **3016**	consult us					3999 **8316**	
	4 P	3615 **6016**	consult us					3999 **8416**	
250 A 1 5	2 P	3615 **2024**	consult us			2 P 3998 **2025**[3] 3 P 3998 **3025**[3] 4 P 3998 **4025**[3]	3 P 5400 **3025** 4 P 5400 **4025**	3999 **8225**	
	3 P	3615 **3024**	consult us					3999 **8325**	
	4 P	3615 **6024**	consult us					3999 **8425**	
400 A 2 6	2 P	3615 **2039**	consult us				3 P 5400 **3040** 4 P 5400 **4040**	3999 **8240**	
	3 P	3615 **3039**	consult us					3999 **8340**	
	4 P	3615 **6039**	consult us					3999 **8440**	

(1) Standard.
(2) Maximum 2 contacts.
(3) Top/bottom.
(4) Direct right side operation.
(5) Locking using RONIS EL11AP lock (lock not included).

NFC and DIN - Direct operation - 630 to 1250 A

Rating (A) Fuse size Frame size	No. of poles	Direct side and front operation	Direct front handle	Direct side handle	Auxiliary contacts	Terminal shrouds
630 A 3 17	2 P	3811 **2063**	Black 3899 **6011**[1][2]	S3 type Black 3899 **7911** + 1437 **3111**	U-type 1 contact NO 3999 **0701**[4] 1 contact NC 3999 **0702**[4]	2 P 3898 **2080**[3] 3 P 3898 **3080**[3] 4 P 3898 **4080**[3]
	3 P	3811 **3063**				
	4 P	3811 **6063**				
800 A 3 17	2 P	3811 **2080**				
	3 P	3811 **3080**				
	4 P	3811 **6080**				
800 A 4 18	2 P	3811 **2081**	Black 3899 **7011**[1][2]			2 P 3898 **2120**[3] 3 P 3898 **3120**[3] 4 P 3898 **4120**[3]
	3 P	3811 **3081**				
	4 P	3811 **6081**				
1250 A 4 18	2 P	3811 **2120**				
	3 P	3811 **3120**				
	4 P	3811 **6120**				

(1) Direct front operation.
(2) Standard.
(3) Top/bottom.
(4) Maximum 8 contacts.

Accessories

Direct operation handle

For front operation

Rating (A)	Frame size	Figure no.	Handle colour	Reference
20 ... 32	0	1	Black	3629 **4012**
20 ... 32	0	1	Red	3629 **4013**
32 ... 400	11 ... 16	2	Black	3629 **7910** (1)
630 ... 800	17	2	Black	3899 **6011**
800 ... 1250	18	3	Black	3899 **7011**

For right side operation

Rating (A)	Frame size	Figure no.	Handle colour	Reference
32 ... 63	1/2	4	Black	3629 **7900**
100 ... 400	3 ... 6	4	Black	3629 **7901**
630 ... 1250	17 ... 18	5	Black	1437 **7911**

(1) Direct operation handle for switches 3841 xxxx and 3831 xxxx.



Fig. 1



Fig.2



Fig. 3



Fig.4



Fig. 5

External front operation handle

Padlockable handle in position 0

Rating (A)	Frame size	Handle type	Handle colour	Operation	External IP(1)	Defeatable handle	Reference
CD 25 ... 63	0/11/12	S1	Black	I - 0	IP55	Yes	1411 **2111**
CD 25 ... 63	0/11/12	S1	Black	I - 0	IP65	Yes	1413 **2111**
CD 25 ... 63	0/11/12	S1	Red/Yellow	I - 0	IP65	Yes	1414 **2111**
CD 25 ... 63	0/11/12	S1	Black	I - 0 - Test	IP65	Yes	1413 **2115**
CD 25 ... 63	0/11/12	S1	Red/Yellow	I - 0 - Test	IP65	Yes	1414 **2115**
100 ... 400	13 ... 16	S2	Black	I - 0	IP55	Yes	1421 **2111**
100 ... 400	13 ... 16	S2	Black	I - 0	IP65	Yes	1423 **2111**
100 ... 400	13 ... 16	S2	Red/Yellow	I - 0	IP65	Yes	1424 **2111**
100 ... 400	13 ... 16	S2	Black	I - 0 - Test	IP65	Yes	1423 **2115**
100 ... 400	13 ... 16	S2	Red/Yellow	I - 0 - Test	IP65	Yes	1424 **2115**
630 ... 800	17	S3	Black	I - 0	IP65	Yes	1433 **3111**
630 ... 800	17	S3	Red/Yellow	I - 0	IP65	Yes	1434 **3111**
800 ... 1250	18	S4	Black	I - 0	IP65	Yes	1443 **3111**
800 ... 1250	18	S4	Red/Yellow	I - 0	IP65	Yes	1444 **3111**

(1) IP: protection degree according to IEC 60529 standard.

Padlockable handle in position 0 and I

Rating (A)	Frame size	Handle type	Handle colour	External IP(1)	Reference
CD 25 ... 63	0/11/12	S1	Black	IP65	1413 **2311**
100 ... 400	13 ... 16	S2	Black	IP65	1423 **2311**

(1) IP: protection degree according to IEC 60529 standard.



S1 type handle



S2 type handle



S3 type handle



S4 type handle

External right side operation handle

Rating (A)	Frame size	Handle type	Handle colour	External IP(1)	Reference
CD 25 ... 63	0/11/12	S1	Black	IP55	1415 **2111**
CD 25 ... 63	0/11/12	S1	Black	IP65	1417 **2111**
CD 25 ... 63	0/11/12	S1	Red/Yellow	IP65	1418 **2111**
100 ... 400	13 ... 16	S2	Black	IP55	1425 **2111**
100 ... 400	13 ... 16	S2	Black	IP65	1427 **2111**
100 ... 400	13 ... 16	S2	Red/Yellow	IP65	1428 **2111**
630 ... 1250	17/18	S3	Black	IP65	1437 **3111**
630 ... 1250	17/18	S3	Red/Yellow	IP65	1438 **3111**

(1) IP: protection degree according to IEC 60529 standard.


S1 type handle



S3 type handle

External front operation handle with metal padlocking lever

Rating (A)	Frame size	Handle type	Handle colour	External IP(1)	Defeatable handle	Reference
CD 25 … 63	0/11/12	S1	Black	IP65	Yes	141D **2911**
CD 25 … 63	0/11/12	S1	Red/Yellow	IP65	Yes	141E **2911**
100 … 400	13 … 16	S2	Black	IP65	Yes	142D **2911**
100 … 400	13 … 16	S2	Red/Yellow	IP65	Yes	142E **2911**
600 …800	17	S3	Black	IP65	Yes	143D **3911**
600 …800	17	S3	Red/Yellow	IP65	Yes	143E **3911**
800 … 1250	18	S4	Black	IP65	Yes	144D **3911**
800 … 1250	18	S4	Red/Yellow	IP65	Yes	144E **3911**

(1) IP: protection degree according to IEC 60529 standard.



S2 type handle



S3 type handle

S-type handle adapter

Use
Enables S-type handles to be fitted in place of existing older style Socomec handles.
Adapter can be utilised as a spacer to increase the distance between the panel door and the handle lever.

Dimensions
Adds 12 mm to the depth of the handle.

Handle colour	To be ordered in multiples of	External IP(1)	Reference
Black	1	IP65	1493 **0000**

(1) IP: protection degree according to IEC 60529 standard.



Alternative S-type handle cover colours

Use
For single lever handles S1, S2, S3 types and double lever handle, S4 type.
Other colours: please consult us.

Handle colour	To be ordered in multiples of	Handle type	Reference
Light grey	50	S1, S2	1401 **0001**
Dark grey	50	S1, S2	1401 **0011**
Light grey	50	S4	1401 **0031**
Dark grey	50	S4	1401 **0041**

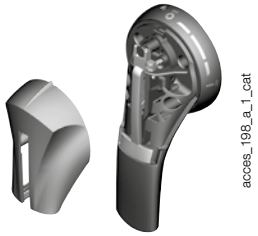

Flat mounting kit

Use
The flat mounting providing compact solution ideally suited to withdrawable applications.
Kit to be used with a handle for flat mounting.

Rating (A)	Frame size	Type	Reference
CD 25 …CD 32	0	Kit + Shaft 200 mm	1429 **7709**
50 … 400	11 … 16	Kit + Shaft 200 mm	1429 **7710**

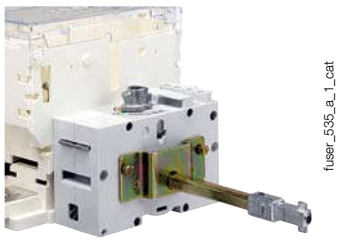

Handle for flat mounting kit

Padlockable handle in position 0					
Rating (A)	**Frame size**	**Handle type**	**Handle colour**	**External IP(1)**	**Reference**
CD 25 … 63	0/11/12	S1	Black	IP55	1411 **2111**(2)
CD 25 … 63	0/11/12	S1	Red/Yellow	IP65	1414 **2111**(2)
100 … 400	13 … 16	S2	Black	IP55	1421 **2111**(2)
100 … 400	13 … 16	S2	Red/Yellow	IP65	1424 **2111**(2)

(1) IP: protection degree according to IEC 60529 standard.
(2) Defeatable handle in position I.



S2 type handle.

Accessories (continued)

Front operation shaft support accessory

Use

This support maintains shaft position for extension shafts greater than 320 mm in length.

Rating (A)	Frame size	Reference
50 … 400	11 … 16	3899 **0400**



Shaft guide for external operation

Use

To guide the shaft extension into the external handle.
This accessory enables the handle to engage the extension shaft with a misalignment of up to 15 mm.
Required for a shaft lengths over 320 mm.

Description	Reference
Shaft guide	1429 **0000**



Shaft for external front operation handle

Use

Standard lengths:
- 200 mm
- 320 mm
- 400 mm
- 500 mm.

Other lengths: consult us.

Rating (A)	Frame size	Shaft length (mm)	Reference
CD 20 …CD 32	0	200	1401 **0520**
CD 20 …CD 32	0	320	1401 **0532**
CD 20 …CD 32	0	400	1401 **0540**(1)
32 … 400	11 … 16	200	1400 **1020**
32 … 400	11 … 16	320	1400 **1032**
32 … 400	11 … 16	500	1400 **1050**(2)
630 … 800	17	200	1400 **1220**
630 … 1250	17/18	320	1400 **1232**
630 … 1250	17/18	500	1400 **1250**(1)

(1) Use the shaft guide accessory for external operation.
(2) Use the front operation shaft support accessory.

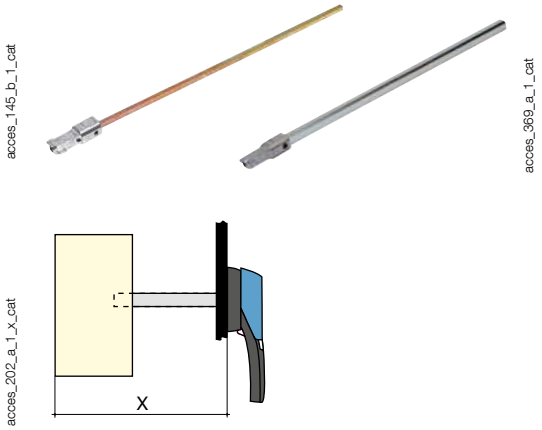

Dimension X (mm) for FUSERBLOC BS88

Rating (A)	CD 20 …CD 32	32	63 … 160	CD160 … CD200	160 … 200	250 … 315	630 … 800	1250
Fuse size	A1	A1	A2-A3/A4	A3-A4	B1-B2	B1-B2-B3	C1-C2-C3	D1
Frame size	0	11	12/13/14	13 A	14/15	15/16	17	18
Shaft length (mm)								
200	102 … 245	100 … 230	125 … 230	150 … 230	135 … 230	160 … 230	270 … 304	
320	102 … 365	100 … 350	125 … 350	150 … 350	135 … 350	160 … 350	270 … 424	304 … 424
400	102 … 445							
500		100 … 530	125 … 530	150 … 530	135 … 530	160 … 530	270 … 600	304 … 600

Dimension X (mm) for FUSERBLOC NFC and DIN

Rating (A)	CD 25 …CD 32	50	63	100 … 160	160	250 … 400	630 … 800	800 … 1250
Fuse size	10x38/14x51	14x51	00C	22x58/00	0	1/2	3	4
Frame size	0	11	12	13	14	15/16	17	18
Shaft length (mm)								
200	102 … 245	100 … 230	125 … 230	135 … 230	145 … 230	160 … 230	270 … 304	
320	102 … 365	100 … 350	125 … 350	135 … 350	145 … 350	160 … 350	270 … 424	304 … 424
400	102 … 445	100 … 430	125 … 430	135 … 430	145 … 430	160 … 430	270 … 504	304 … 504
500		100 … 530	125 … 530	135 … 530	145 … 530	160 … 530	270 … 604	304 … 604

Shaft extensions for external side operation

Use

Standard lengths, 200 mm.

Rating (A)	Frame size	Handle type	Dimension Y (mm)	Shaft length (mm)	Reference
CD 25 ...CD 32	0	S	36 ... 159	200	1401 **0520**
50 ... 400	11 ... 16	S	36 ... 172	200	1400 **1020**
630 ... 1250	17/18	S	15 ... 150	200	1400 **1220**

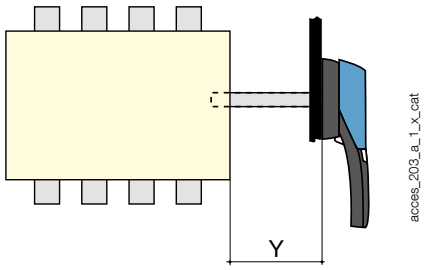

Integrated solid neutral link

Use

Fixing the solid neutral onto the mechanism produces a device with a solid neutral of the same size as a standard three-pole device (+ 6 mm).

BS88 for external front operation

Rating (A)	Switch body size	Bar rating (A)	Reference
32 ... 100	11/12/13	125	3829 **9310**
CD 160 ... CD 200	13a	200	3829 **9320**
160	14	200	3829 **9320**
200 ... 250	15	250	3829 **9325**
315 ... 400	16	400	3829 **9339**
630 ... 800	17	800	3829 **9308**
1250	18	1250	3829 **9312**

NFC and DIN For external front operation

Rating (A)	Frame size	Bar rating (A)	Reference
50 ... 125	11/12/13	125	3829 **9310**
160	13	160	3829 **9320**
160	14	200	3829 **9320**
250	15	250	3829 **9325**
400	16	400	3829 **9339**
630 ... 800	17	800	3829 **9308**
800 ...1250	18	1250	3829 **9312**



Solid neutral module

BS88 for external front operation

Rating (A)	Switch body size	I_{max} (A)	Distance (mm)	Reference
32	1/11	32	27	3629 **9227**
63	2/12	63	32	3629 **9232**
100	3/13	100	36	3629 **9236**
CD 160 ... CD 200	13 a	200	36	3629 **9237**
160	4/14	160	50	3629 **9250**
200 ... 250	5/15	250	60	3629 **9260**
315 ... 400	6	400	66	3629 **9266**(1)
630 ... 800	17	800	94	3629 **9294**
1250	18	1250	120	3629 **9212**

NFC and DIN For external front operation

Rating (A)	Frame size	I_{max}(A)	Distance (mm)	Reference
50	1/11	50	27	3629 **9227**
63	2/12	63	32	3629 **9232**
100 ... 160	3/13	160	36	3629 **9236**
160	4/14	160	50	3629 **9250**
250	5/15	250	60	3629 **9260**
400	6/16	400	60	3629 **9266**(1)
630 ... 800	17	800	94	3629 **9294**
800 ... 1250	18	1250	120	3629 **9212**

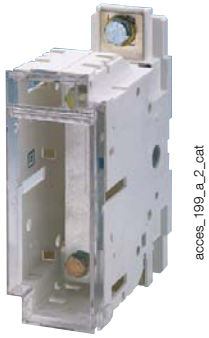

(1) For external front operation switches an adaptation kit 3999 0000 must be ordered in addition to the original product reference

Solid links

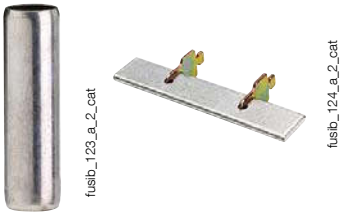

BS88 switches

Rating (A)	Frame size	Fuse size	I_{max} (A)	Reference
32	11	A1	32	3629 **9003**
63	12	A2-A3	63	3629 **9006**
100	13	A4	160	3629 **9010**
CD 160	13a	A3-A4	160	3629 **9010**
160	14	A4	160	3629 **9010**
160	14	B1-B2	200	3629 **9016**
CD 200	13a	A3-A4	160	3629 **9010**
200	15	B1-B2	200	3629 **9016**
250	15	B1-B2-B3	315	3629 **9025**
315	16	B1-B2-B3	315	3629 **9025**
400	16	B1-B2-B3-B4	400	3629 **9040**
630 ... 800	17	C1-C3	800	3629 **9063**
1250	18	D1	1250	3629 **9120**

NFC and DIN switches

Rating (A)	Frame size	Fuse size	I_{max}(A)	Reference
50	1/11	14 x 51	50	6029 **0000**
63	2/12	00C	160	6420 **0000**
100 ... 125	3/13	22 x 58	125	6039 **0000**
125 ... 160	3/13	00	160	6420 **0000**
160	4/14	0	160	6421 **0000**
250	5/15	1	250	6421 **0001**
400	6/16	2	400	6421 **0002**
630 ... 800	17	3	800	6421 **0003**
800 ... 1250	18	4	1250	6441 **0005**

Accessories (continued)

A-type auxiliary contacts

Use
Pre-break and position 0 and I signalling by 1 or 2 NO /NC auxiliary contacts.
For low level use, specific auxiliary contacts: please consult us.

Connection to the control circuit
By 6.35 mm fast-on terminal.

Electrical characteristics
30 000 operations.


acces_046_a_1_cat


acces_047_a_2_cat

References

NO / NC auxiliary contacts			
Rating (A)	**Frame size**	**Contact(s)**	**Reference**
CD 20 …CD 32	0	1	3999 **0001**
CD 20 …CD 32	0	2	3999 **0002**
32 … 400(1)	1 … 6	1	3999 **0021**(2)
32 … 400(1)	1 … 6	2	3999 **0022**(2)

(1) Side direct operation switch only.
(2) A type auxiliary contacts cannot be mounted in conjunction with integrated solid neutral.

Characteristics

		Operating current I_e (A)			
Rating (A)	**Current nominal (A)**	**250 VAC AC-13**	**400 VAC AC-13**	**24 VDC DC-13**	**48 VDC DC-13**
CD 20 … 400	16	4	2	12	2

U-type auxiliary contacts(1)

Use
Compact universal type auxiliary contacts which can be configured for operation in either, or both, ON and TEST positions for CD 20 to 1250 A FUSERBLOC. Each slot can accommodate up to two interlocked A/Cs.

Connection to the control circuit
By terminals with max. section 2 x 2.5 mm².
For FUSERBLOC CD 20 to 400 A. Pre-break and signalling of positions 0, I and TEST.
For FUSERBLOC ≥ 630 A: Pre-break and position 0 and I signalling.


acces_056_a_1_cat

References

NO auxiliary contacts			
Rating (A)	**Frame size**	**Contact(s)**	**Reference(1)**
CD 20 … 1250	0 … 18	1	3999 **0701** (2)

NC auxiliary contacts			
Rating (A)	**Frame size**	**Contact(s)**	**Reference(1)**
CD 20 … 1250	0 … 18	1	3999 **0702**(2)

(1) Cannot be mounted in direct operation CD20 - CD32 switches..
(2) 4 auxiliary contacts as standard without additional A/C holder.

Contact holder for additional auxiliary contacts			
Rating (A)	**Frame size**	**Contact(s)**	**Reference**
CD 20 …CD 32	0	4 (2 x 2 max)	3999 **0710**
32 … 400	11 … 16	4 (2 x 2 max)	3999 **0600**

Characteristics

	Operating current I_e (A)			
Rating (A)	**250 VAC AC-15**	**400 VAC AC-15**	**24 VDC DC-13**	**48 VDC DC-13**
CD 20 … 1250	3	1.8	2.8	1.4

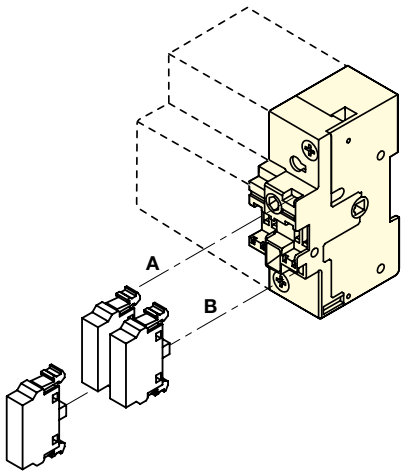

acces_043_a_1_x_cat

(1) CD 20 - CD 32 : U-type auxiliary contacts cannot be mounted on switches with an integrated solid neutral or with direct operation handle.

S and ST-type auxiliary contacts

Use
For FUSERBLOCs 32 to 1250 A, position 0 and I signalling by 1 to 4 NO + NC auxiliary contacts.

Electrical principle
The NO + NC S-type auxiliary contacts can be configured as 2 NC or 2 NO.

Connection
By terminals with max. cross-section 10 mm².

Mechanical characteristics
30 000 operations.


acces_051_a_2_cat

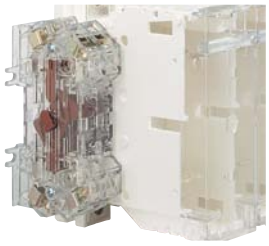
acces_083_a_1_cat

References

S-type auxiliary contacts 0-I
for external front and right-side operation (Standard operation)

Rating (A)	Frame size	Contact type	S-type AC Reference	Drive shaft (optional) Reference
32 … 1250	11 … 18	NC+NO	3999 **0041**(1)	3999 **0003**

ST-type auxiliary contacts I-0-TEST
for external front and right-side operation (TEST operation)

Rating (A)	Frame size	Contact type	Description	ST-type AC Reference	Drive shaft Reference
32 … 400	11 … 16	NC+NO	TEST + ON	3999 **0141**(2)	3999 **0103**
32 … 400	11 … 16	2 O	TEST + ON	3999 **0241** (2)	3999 **0103**

(1) Drive shaft included with S-type Auxiliary Contact.
(2) Drive shaft to be ordered in addition to the ST-type Auxiliary Contact.

Characteristics

Rating (A)	Current nominal (A)	Operating current I_e (A) 250 VAC AC-13	Operating current I_e (A) 400 VAC AC-13
32 … 1250	20	10	8

Important:

> For the 400 A frame size 16, an adaptation kit reference 3999 0000 must be ordered in addition to the auxiliary contact kit.

Fuse cover interlocking

Use
On NFC and DIN, side direct operation, locking of the opening of the fuse protection cover when FUSERBLOC is engaged (position I).

Rating (A)	Frame size	Fuse size	No. of poles	Reference
CD 20 … 50	0 … 1	10 x 38 / 14 x 51	2 / 3 / 4	included
63	2	00C	2 / 3 / 4	3999 **8906**
100 … 125	3	22 x 58	2 / 3 / 4	3999 **8912**
125 … 160	3	00	2 / 3 / 4	3999 **8912**
160	4	0	2 P	3999 **8216**
160	4	0	3 P	3999 **8316**
160	4	0	4 P	3999 **8416**
250	5	1	2 P	3999 **8225**
250	5	1	3 P	3999 **8325**
250	5	1	4 P	3999 **8425**
400	6	2	2 P	3999 **8240**
400	6	2	3 P	3999 **8340**
400	6	2	4 P	3999 **8440**

Terminal shrouds

Use
Top or bottom IP20 protection (on the front) against direct contact with terminals or connection parts.

Two sets required to fully shroud both incoming and outgoing terminals.

Rating (A)	Frame size	Position	No. of poles	Reference
CD 20 … 63	0/1/2/12	top / bottom	2 / 3 / 4 P	integrated
100 … CD 200	3/4/13/14	top / bottom	2 P	3998 **2016**
100 … CD 200	3/4/13/14	top / bottom	3 P	3998 **3016**
100 … CD 200	3/4/13/14	top / bottom	4 P	3998 **4016**
200 … 400	5/6/15	top / bottom	2 P	3998 **2025**
200 … 400	5/6/15	top / bottom	3 P	3998 **3025**
200 … 400	5/6/15	top / bottom	4 P	3998 **4025**
315 … 400	16	top / bottom	2 P	3898 **2040**
315 …400	16	top / bottom	3 P	3898 **3040**
315 …400	16	top / bottom	4 P	3898 **4040**
630 … 800	17	top / bottom	2 P	3898 **2080**
630 … 800	17	top / bottom	3 P	3898 **3080**
630 … 800	17	top / bottom	4 P	3898 **4080**
800 … 1250	18	top / bottom	2 P	3898 **2120**
800 … 1250	18	top / bottom	3 P	3898 **3120**
800 … 1250	18	top / bottom	4 P	3898 **4120**


fuser_314_a_1_cat

Accessories (continued)

NFC and DIN worked fuse indication

Use
For fuse cartridge with striker (size 14 x 51 22 x 58 ; 0 ; 1 ; 2 ; 3 and 4).

Electrical principle
A NO/NC auxiliary contact detects that the fuse has blown.

Connection to the control circuit
6.35 mm fast-on terminal.

Mechanical characteristics
30 000 operations.

References

NO/NC type auxiliary contacts for 2 pole				
Rating (A)	**Frame size**	**Fuses**	**Contact(s)**	**Reference**
50	11	14 x 51	1st	3994 **0405**
100 … 125	13	22 x 58	1st	3994 **0210**
160	14	0	1st	3994 **0216**
250	15/16	1-2	1st	3994 **0225**
400(1)	16	2	1st	3894 **0440**
630	17	3	1st	3894 **1206**
800 … 1250	18	4	1st	3894 **1212**

NO/NC type auxiliary contacts for 3 pole				
Rating (A)	**Frame size**	**Fuses**	**Contact(s)**	**Reference**
CD 32	0	14 x 51	1st	3994 **0303**
50	11	14 x 51	1st	3994 **0405**
100 … 125	13	22 x 58	1st	3994 **0310**
160	14	0	1st	3994 **0316**
250	15/16	1-2	1st	3994 **0325**
400(1)	16	2	1st	3894 **0440**
630	17	3	1st	3894 **1306**
800 … 1250	18	4	1st	3894 **1312**
50 … 250	11		2nd	3994 **1901**
400	16	2	2nd	3994 **1902**
630 … 1250	16	-	2	3994 **1901**

NO/NC type auxiliary contacts for 4 pole or 3 pole + neutral				
Rating (A)	**Frame size**	**Fuses**	**Contact(s)**	**Reference**
50	11	14 x 51	1st	3994 **0405**
100 … 125	13	22 x 58	1st	3994 **0410**
160	14	0	1st	3994 **0416**
250	15/16	1-2	1st	3994 **0425**
400(1)	16	2	1st	3894 **0440**
630	17	3	1st	3894 **1406**
800 … 1250	18	4	1st	3894 **1412**
50 … 250	11		2nd	3994 **1901**
400	16	2	2nd	3994 **1902**
630 … 1250	16	-	2	3994 **1901**

(1) For front direct and external left side operation handles, please order references 39940225 (2P), 39940325 (3P), 39940425 (4P)



fuser_311_a_1_cat

DDMM for cylindrical fuses


fuser_312_a_1_cat

DDMM for NH fuses

Characteristics

		Operating current I_e (A)			
Rating (A)	**Current nominal (A)**	**250 VAC AC-13**	**400 VAC AC-13**	**24 VDC DC-13**	**48 VDC DC-13**
CD 32 ... 1250	16	4	3	12	2

Electronic fuse monitoring device (FMD)

Use
Provides fuse state monitoring and worked fuse indication even for fuse links without monitoring device strikers. Suitable for use with BS88, DIN and UL type fuses.

Principle
The Fuse Monitoring Device (FMD) detects the worked fuse and provides a signal via:
a relay and 1 LED (FMD10) or a bi-stable relay and 3 LEDs (FMD30).

The FMD can be DIN rail or back plate mounted close to the Fuserbloc, directly mounted on the FUSERBLOC, or it can be door mounted to provide information directly on the front of a panel.

References

For FUSERBLOC 63 to 1250A - size 000 to 4		
Nb of LEDs	**Operating voltage Ph/Ph**	**Reference**
1 (FMD10)	120 - 260 VAC	3899 **1120**
1 (FMD10)	380 - 690 VAC	3899 **1380**
3 (FMD30)	120 - 260 VAC	3899 **3120**
3 (FMD30)	380 - 690 VAC	3899 **3380**
Accessories		**Reference**
Kit for connection accessories	Standard	3819 **9120**
Kit for connection accessories	Door mounted	3829 **9120**

Relay characteristics

	Relay operating current I_e (A)	
Rating (A)	**AC-15**	**DC-13**
63 ... 1250	2.5 A	0.2


acces_319_a

1 LED version (FMD10)


acces_310_a

3 LED version (FMD30)

Important:

> For direct mounting on the 400 A frame size 16, an adaptation kit reference 3999 0000 must be ordered in addition to the FMD.

Cage terminals

Use

Connection of bare copper cables onto the terminals (without lugs).



References

Rating max (A)	Frame size	No. of poles	Reference
CD 20 … 63	0 … 12	2 / 3 / 4 P	integrated
100 … 160	13/14	3 P	5400 **3016**
100 … 160	13/14	4 P	5400 **4016**
250	15	3 P	5400 **3025**
250	15	4 P	5400 **4025**
400	16	3 P	5400 **3040**
400	16	4 P	5400 **4040**

Connections

Rating (A)	Flexible cable cross-section (mm²)	Rigid cable cross-section (mm²)	Flexible bar width (mm)	Stripped over (mm)
100 … 160	16 … 95	16 … 95	13	22
250	16 … 185	16 … 185	18	27
400	50 … 240	50 … 300	20	34

Dimensions

Rating (A)	A	A1	C	R	ØX	X1	Z
100 … 160	47.5	22.5	25	20	8.5	M12	10
250	62	31.5	31.5	25	10.5	M16	14
400	71.5	32	38	32	10.5	M20	15

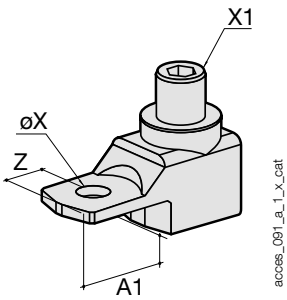

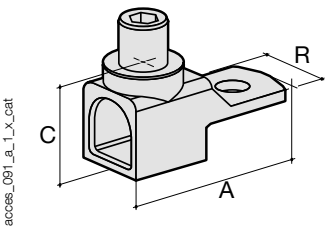

Handle key interlocking accessories

Use

Locking in position 0 of the direct, front or right side operation:

- using a padlock (not supplied) in direct right side operation: integrated into the handle,
- using a padlock (not supplied): right-side or front operation switch from 32 to 1250 A, factory integrated
- using a padlock (not supplied) in external operation.

Locking using RONIS EL 11 AP lock (not supplied)

Rating (A)	Frame size	Operation	Figure n°	Reference
CD 20 … 1250	0 … 18	external front	2	1499 **7701**
32 … 63	1/2	direct	1	3629 **7903**
100 … 400	3 …6	direct	1	3629 **7913**
630 … 1250	17 … 18	direct		3829 **7923**

Locking using K-type CASTELL lock (not supplied)

Rating (A)	Frame size	Operation	Figure n°	Reference
CD 20 … 1250	0 … 18	external front	3	1499 **7702**

Locking using FS-type CASTELL lock (not supplied)

Rating (A)	Frame size	Operation	Figure n°	Reference
CD 20 … 1250	0 … 18	external front	3	1499 **7703**

Locking using XOP (not supplied)

Rating (A)	Frame size	Operation	Reference
CD 20 … 1250	0 18	external front	1499 **7702**

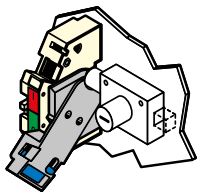

Fig. 1

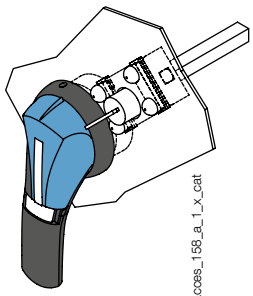

Fig.2

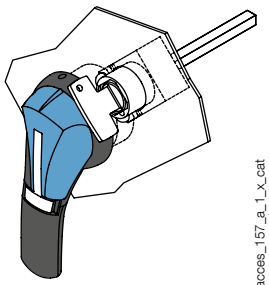

Fig. 3

Label holder

Use

Recognisable self-adhesive label allowing identification of the devices.

Dimensions W x H (mm)	Nb of pieces in KIT	Reference
18 x 13	5	7769 **9999**



Characteristics according to IEC 60947-3

20 to 100 A

Thermal current I_{th} (40°C)		**20 A**	**25 A**	**CD 32 A**	**CD 32 A**	**32 A**	**50 A**	**63 A**	**100 A**
BS88/DIN fuse size		A1/-	-/10 x 38	-/10 x 38	A1/14 x 51	A1/-	-/14 x 51	A2-A3/00C	A4*/22 x 58
Frame size for direct operation		0	0	0	0	1	1	2	3
Switch body size for front and side operation		0	0	0	0	11	11	12	13
Rated insulation voltage U_i (V)		800	800	800	800	800	800	800	800
Rated impulse withstand voltage U_{imp} (kV)		8	8	8	8	8	8	8	8
Rated operational currents I_e (A)									
Rated voltage	**Utilisation category**	**A/B(1)**	**A/B(1)**	**A/B(1)**	**A/B(1)**	**A/B(1)**	**A/B(1)**	**A/B(1)**	**A/B(1)**
400 VAC	AC-22 A / AC-22 B	20/20	25/25	32/32	32/32	32/32	50/50	63/63	100/100
400 VAC	AC-23 A / AC-23 B	20/20	25/25	32/32	32/32	32/32	50/50	63/63	100/100
690 VAC	AC-22 A / AC-22 B	20/20	25/25	32/32	32/32	32/32	50/50	63/63	100(2)/100(2)
690 VAC	AC-23 A / AC-23 B	20/20	25/25	32/32	32/32	32/32	50/50	63/63	100(2)/100(2)
220 VDC	DC-20 A / DC-20 B			-/32		32/32	50/50	63/63	100/100
220 VDC	DC-21 A / DC-21 B		-/25(4)			32/32	40/40	40/40	100/100
440 VDC	DC-20 A / DC-20 B					32(3)/32(3)	50(3)/50(3)	63(3)/63(3)	100(3)/100(3)
440 VDC	DC-21 A / DC-21 B					32(3)/32(3)	40(3)/40(3)	40(3)/40(3)	100(3) / 100(3)
Operational power in AC-23 (kW)									
At 400 VAC without pre-break in AC(1)(5)		9/9	11/11	15/15	15/15	15/15	25/25	30/30	51/51
At 690 VAC without pre-break in AC(1)(5)		15/15	22/22	25/25	25/25	25/25	45/45	55/55	90/90
Reactive power (kvar)									
At 400 VAC(5)		8	11	15	15	15	23	28	45
Fuse protected short-circuit withstand BS88/DIN (kA rms prospective)									
Prospective short-circuit (kA rms)(6)		80/-	-/100	-/100	80/100	80/100	-/100	80/100	80/100
Associated fuse rating (A)(6)		20/-	-/25	-/32	32/32	32/32	-/50	63/63	100/100
Short-circuit capacity									
Rated peak withstand current (kA peak)(6)		5.5	5.5	5.5	5.5	9	7.6	10.6	20
Fuse selection (maximum fuse size)**									
SOCOMEC BS88 - Standard max		6A10 0020	6012 0025	6012 0032	6A10 0032	6A10 0032		6A30 0063	6A40 0100
SOCOMEC BS88 - Motor max		6A1M 0032	6013 0025	6013 0032	6A1M 0063	6A1M 0032		6A3M 0080	6A4M 0125
SOCOMEC DIN - Distribution (gI - gG)							6022 0050	6600 0063	6032 0100
SOCOMEC DIN - Motor (aM)							6023 0050	6601 0063	6033 0100
BUSSMANN - Standard max		NITD 20			NITD 32	NITD 32		BAO 63	CEO 100
BUSSMANN - Motor max		NITD 20M32			NITD 32M63	NITD 32M63		BAO 63M80	CEO 100M125
LAWSON - Standard max		NIT 20			NIT 32	NIT 32		TIS 63	TCP 100
LAWSON - Motor max		NIT 20M32				NIT 20M32		TIS 63M80	CTFP 100M125
GE - Standard max		NIT 20			NET 32	NET 32		TIS 63	TCP 100
GE - Motor max		NIT 20M32			NET 32M63	NET 32M63		TIS 63M80	OCP 100M125
Connection									
Minimum Cu cable cross-section (mm^2)		2.5	2.5	2.5	2.5	6	6	10	25
Maximum Cu cable cross-section (mm^2)		16	16	16	16	25	25	25	95
Maximum busbar width (mm)									20
Min. / Max. tightening torque min (Nm)		2/-	2/-	2/3	2	2.5/3	2.5/3	2.5/3	8.3/13
Mechanical characteristics									
Durability (number of operating cycles)		20 000	20 000	20 000	20 000	10 000	10 000	10 000	10 000
Weight of 3 P switch (kg)		0.48	0.48	0.48	0.50	0.80	0.80	1	1.5
Weight of 4 P switch (kg)		0.50	0.50	0.50	0.52	1	1	1.3	2
Weight of 1 P extra (kg)						0.2	0.2	0.3	0.5
Frame pitch (mm)						32	27	32	36

(1) Category with index A = frequent operation - Category with index B = infrequent operation.
(2) With terminal shrouds or terminal screen.
(3) 4-pole device with 2 pole in series by polarity.
(4) 3-pole device with 2 poles "+" in series and 1 pole "-".
(5) The power value is given for information only, the current values vary from one manufacturer to another.
(6) For a rated operational voltage U_e = 400 VAC.
** For fuse size A4: max diameter 31 mm.*
*** Please ensure that fuse let through current does not exceed short-circuit capacity of the switch (kA peak).*

125 to 200 A

Thermal current I_{th} (40°C)		**125 A**	**125 A**	**160 A**	**CD 160 A**	**160 A**	**160 A**	**CD 200 A**	**200 A**
NFC/DIN fuse size		-/22 x 58	-/00	-/00	A3-A4*/-	A4/0	B1-B2/-	A3-A4*/-	B1-B2/-
Frame size for direct operation		3	3	3		4	4		5
Switch body size for front and side operation		13	13	13	13	14	14	13	15
Rated insulation voltage U_i (V)		800	800	800	800	800	800	800	800
Rated impulse withstand voltage U_{imp} (kV)		8	8	8	8	8	8	8	8
Rated operational currents I_e (A)									
Rated voltage	**Utilisation category**	**A/B(1)**	**A/B(1)**	**A/B(1)**	**A/B(1)**	**A/B(1)**	**A/B(1)**	**A/B(1)**	**A/B(1)**
400 VAC	AC-22 A / AC-22 B	125/125	125/125	160/160	160/160	160/160	160/160	200/200	200/200
400 VAC	AC-23 A / AC-23 B	125/125	125/125	160/160	160/160	160/160	160/160	200/200	200/200
690 VAC	AC-22 A / AC-22 B	125(2)/125(2)	125(2)/125(2)	160(2)/160(2)	160(2)/160(2)	160(2)/160(2)	160(2)/160(2)	160(2)/160(2)	200(2)/200(2)
690 VAC	AC-23 A / AC-23 B	100(2)/100(2)	100(2)/100(2)	125(2)/125(2)	125(2)/125(2)	125(2)/125(2)	125(2)/125(2)	125(2)/125(2)	160/200(3)
220 VDC	DC-20 A / DC-20 B	125/125	125/125	160/160	160/160	160/160	160/160	160/160	200/200
220 VDC	DC-21 A / DC-21 B	100/100	100/100	125/125	125/125	125/125	125/125	125/125	200/200
440 VDC	DC-22 A / DC-22 B	125(3)/125(3)	125(3)/125(3)	160(3)/160(3)	160(3)/160(3)	160(3)/160(3)	160(3)/160(3)	160(3)/160(3)	200(3)/200(3)
440 VDC	DC-23 A / DC-23 B	100(3)/100(3)	100(3)/100(3)	125(3)/125(3)	160(3)/160(3)	125(3)/125(3)	125(3)/125(3)	125(3)/125(3)	200(3)/200(3)
Operational power in AC-23 (kW)									
At 400 VAC without pre-break in AC(1)(4)		63/63	63/63	80/80	80/80	80/80	80/80	80/80	100/100
At 690 VAC without pre-break in AC(1)(4)		90/90	90/90	110/110	110/110	110/110	110/110	110/110	150/185
Reactive power (kvar)									
At 400 VAC(4)		55	55	75	70	75	75	90	90
Fuse protected short-circuit withstand (kA rms prospective)									
Prospective short-circuit (kA rms)(5)		-/100	-/100	-/100 (50)	50/-	80/100	80/100	50/-	80/-
Associated fuse rating (A)(5)		-/125	-/125	-/125 (160)	160/-	160/160	160/160	200/-	200/-
Short-circuit capacity									
Rated peak withstand current (kA peak)(5)		20	20	20	20	22.7	22.7	20	32.5
Fuse selection (maximum fuse size)**									
SOCOMEC BS88 - Standard max					6A40 0160	6A40 0160	6B20 0160	6A40 0200	6B20 0200
SOCOMEC BS88 - Motor max					6A4M 0160	6A4M 0160	6B1M 0200	6A4M 0315	6B2M 0315
SOCOMEC DIN - Distribution (gl - gG)		6032 0125	6692 0125	6692 0160		6702 0160			
SOCOMEC DIN - Motor (aM)		6033 0125	6693 0125	6693 0160		6703 0160			
BUSSMANN - Standard max					DEO 160	DEO 160	DD 160	DEO 200	DD 200
BUSSMANN - Motor max					CEO 100M160	DEO 100M200	CD 100M200	DEO 200M315	DD 200M315
LAWSON - Standard max					CTFP 160	TFP 160	TF 160	TF 200	TF 200
LAWSON - Motor max					CTCP 100M160	TCP 100M200	TCP 100M200	TC 200M315	TC 200M315
GE - Standard max					TCP 100	TFP 160	TF 160	TF 200	TF 200
GE - Motor max					OCP 100M160	TCP 100M201	TC 100M200	TF 200M315	TF 200M315
Connection									
Minimum Cu cable cross-section (mm^2)		35	35	35	35	50	50	35	95
Maximum Cu cable cross-section (mm^2)		95	95	95	95	95	95	95	240
Maximum busbar width (mm)		20	20	20	20	20	20	20	32
Tightening torque min (Nm)		8.3/13	8.3/13	8.3/13	8.3/13	8.3/13	8.3/13	8.3/13	20/26
Mechanical characteristics									
Durability (number of operating cycles)		10 000	10 000	10 000	10 000	10 000	10 000	10 000	10 000
Weight of 3 P switch (kg)		1.5	1.5	1.8	1.8	1.8	1.8	1.8	3.2
Weight of 4 P switch (kg)		2	2	2.3	2.3	2.3	2.3	2.3	4.5
Weight of 1 P extra (kg)		0.5	0.5	0.5	0.5	0.5	0.5	0.5	1.3
Frame pitch (mm)		36	36	36	36	50	50	36	60

(1) Category with index A = frequent operation - Category with index B = infrequent operation.
(2) With terminal shrouds or phase barrier.
(3) 4-pole device with 2 poles in series per polarity.
(4) The power value is given for information only, the current values vary from one manufacturer to another.
(5) For a rated operational voltage U_e = 400 VAC.
*** Please ensure that fuse let through current does not exceed short-circuit capacity of the switch (kA peak).*

Characteristics according to IEC 60947-3 (continued)

250 to 1250 A

Thermal current I_{th} (40°C)		**250 A**	**315 A**	**400 A**	**630 A**	**800 A**	**800 A**	**1250 A**
NFC/DIN fuse size		B1-B2-B3/1	B1-B2-B3/-	B1-B2-B3-B4/2	C1-C2/3	C1-C2-C3/3	-/4	D1/4
Frame size for direct operation		5	6	6	17	17	18	18
Switch body size for front and side operation		15	16	16	17	17	18	18
Rated insulation voltage U_i (V)		800	1000(800*)	1000(800*)	1000	1000	1000	1000
Rated impulse withstand voltage U_{imp} (kV)		8	12(8*)	12(8*)	12	12	12	12
Rated operational currents Ie (A)								
Rated voltage	**Utilisation category**	**A/B(1)**	**A/B(1)**	**A/B(1)**	**A/B(1)**	**A/B(1)**	**A/B(1)**	**A/B(1)**
400 VAC	AC-22 A / AC-22 B	250/250	315/315	400/400	630/630	800/800	800/800	1250/1250
400 VAC	AC-23 A / AC-23 B	250/250	315/315	400/400	630/630	800/800	800/800	1000/1250
690 VAC	AC-22 A / AC-22 B	250(2)/250(2)	315(2)/315(2)	400/400	500/630	800/800	800/800	800/1250
690 VAC	AC-23 A / AC-23 B	250(2)/250(2)	315(2)/315(2)	315/400	315/400	630/630	800/800	800/1250
220 VDC	DC-20 A / DC-20 B	250/250	315/315	400/400	630/630	800/800	800/800	1250/1250
220 VDC	DC-21 A / DC-21 B	200/200	315/315	315/315	630/630	800/800	800/800	1250/1250
440 VDC	DC-22 A / DC-22 B	250(3) / 250(3)	315(3) / 315(3)	315(3)/315(3)	400(3)/630(3)	800(3) / 800(3)	800/800	1250(3) / 1250(3)
440 VDC	DC-23 A / DC-23 B	200(3) / 200(3)	250(3) / 315(3)	250(3) / 315(3)	400(3)/630(3)	800(3) / 800(3)	800/800(3)	1000(3) / 1000(3)
Operational power in AC-23 (kW)								
At 400 VAC without pre-break in AC(1)(4)		132/132	160/160	220/220	355/355	450/450	450/450	560/560
At 690 VAC without pre-break in AC(1)(4)		220/220	220/295	220/295	295/400	400/400	400/400	400/475
Reactive power (kvar)								
At 400 VAC(4)		115	145	185	290	365	355	460
Fuse protected short-circuit withstand (kA rms prospective)								
Prospective short-circuit (kA rms)(5)		80/100	80/-	80/50	80/100	80/100	-/100	-/100
Associated fuse rating (A)(5)		250/250	315/-	400/400	630/630	800/800	-/800	-/1250
Short-circuit capacity								
Rated peak withstand current (kA peak)(5)		32.5	40	40	70	80	80	90
Fuse selection (maximum fuse size)**								
SOCOMEC BS88		6B20 0250	6B30 0315	6B40 0400	6C20 0630	6C30 0800		
SOCOMEC BS88		6B2M 3015	6B3M 0400	6B4M 0500				
SOCOMEC DIN		6712 0250		6722 0400	6732 0400		6746 0800	6746 1200
SOCOMEC DIN		6713 0250		6723 0400	6733 0400		6747 0800	6747 1200
BUSSMANN		ED 250	ED 315	ED 400	FF 630	GF 800		
BUSSMANN		DD 200M315	ED 315M400	ED 400M500				
LAWSON		TKF 250	TKF 315	TMF 400	TTM 630	TLM 800		
LAWSON		TF 200M315	TKF 315M400	TMF 400M500				
GE		TKF 250	TKF 315	TMF 400	TTM 630	TLM 800		
GE		TF 200M315	TKF 315M355	TMF 400M450				
Connection								
Minimum Cu cable cross-section (mm^2)		95	185	185	2 x 150	2 x 185		
Maximum Cu cable cross-section (mm^2)		240	240	240	2 x 300	2 x 300	4 x 185	4 x 185
Maximum busbar width (mm)		32	45	45	63	63	80	80
Tightening torque min (Nm)		20/26	20/26	20/26	40/45	40/45	40/45	40/45
Mechanical characteristics								
Durability (number of operating cycles)		10 000	10 000	10 000	8 000	8 000	5 000	5 000
Weight of 3 P switch (kg)		3.2	4.8	4.8	16	17	25	25
Weight of 4 P switch (kg)		4.5	6.1	6.1	20	21.5	30	30
Weight of 1 P extra (kg)		1.3	1.3	1.3			3	3
Frame pitch (mm)		60	66	66	94	94	120	120

(1) Category with index A = frequent operation - Category with index B = infrequent operation.
(2) With terminal shrouds or terminal screen.
(3) 4-pole device with 2 pole in series by polarity.
(4) The power value is given for information only, the current values vary from one manufacturer to another.
(5) For a rated operational voltage U_e = 400 VAC.
** Direct operation switch.*
*** Please ensure that fuse let through current does not exceed short-circuit capacity of the switch (kA peak).*

Dimensions

External operation

NFC and DIN CD 25 to CD 32 A in size 10 x 38

External front operation

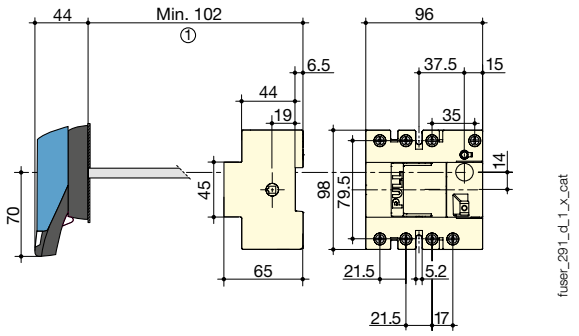

External side operation

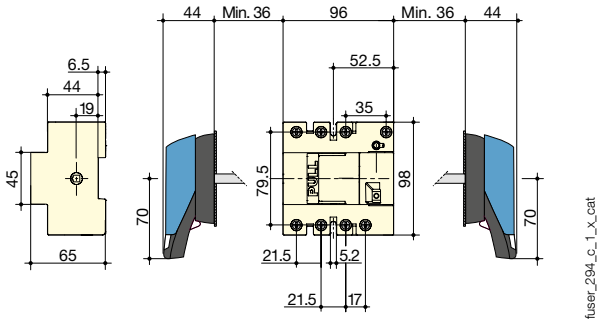

1. With 1 U-type AC: 130 mm.
With 2 U-type AC: 155 mm.

BS88 CD 20 to CD 32 A in size A1 - NFC and DIN 32 A in size 14 x 51

External front operation

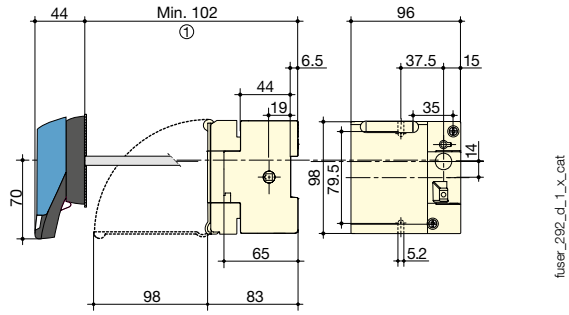

External side operation

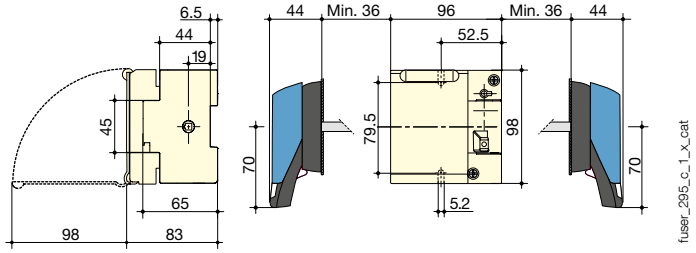

1. With 1 U-type AC: 130 mm.
With 2 U-type AC: 155 mm.

BS88 CD 20 to CD 32 A in size A1 - NFC and DIN 25 to 32 in size 10 x 38 and 14 x 51

External front operation fuse combination changeover

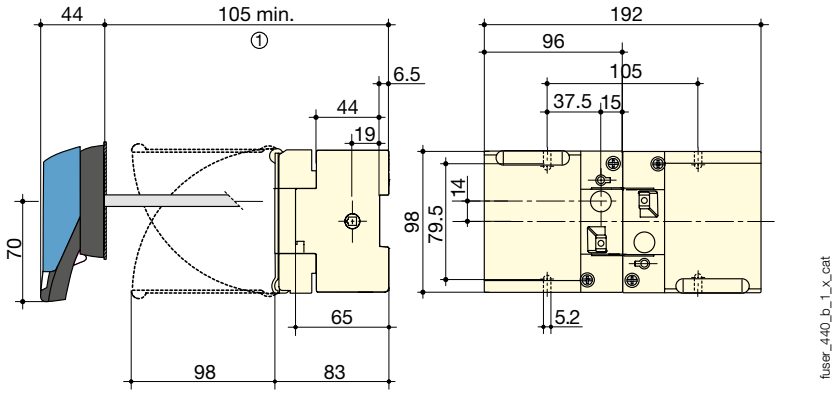

1. With 1 U-type AC: 130 mm
With 2 U-type AC: 155 mm.

Dimensions (continued)

External operation

BS88 32 to 250 A - NFC and DIN 50 to 250 A

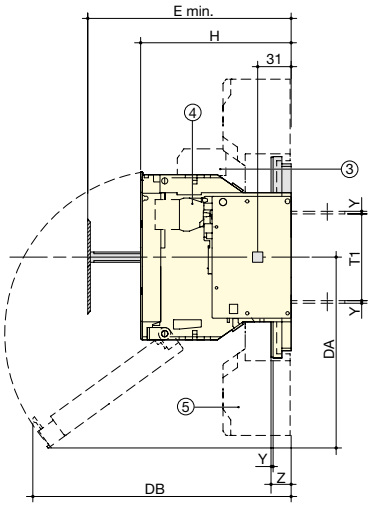

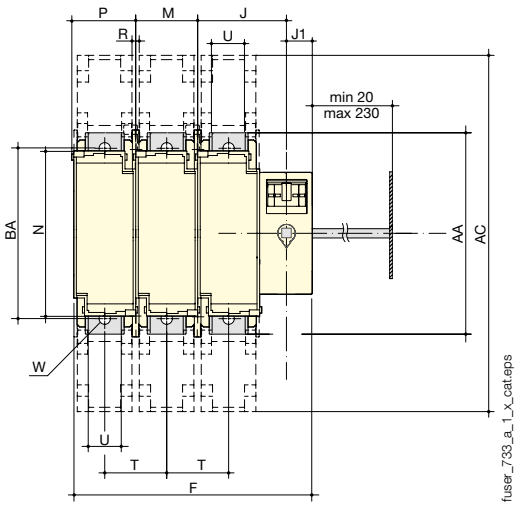

1. Position TEST.
2. Rear connection (option)
3. 1 or 2 CA type DDMM
4. 1 or 8 CA NO/NC pre-break.
5. Terminal shrouds.

Rating (A)	NFC/DIN Fuse size	BS88 Fuse size	Frame size	Overall dimensions E min	Terminal shrouds AC	Switch body								Switch mounting				Connection							
						F 3p.	F 4p.	H	J	J1	BC	DA	DB	M	N	P	R	T	T1	U	W	Y	Z	AA	BA
32		A1	11	100	-	121	148	87	45	18	70	85	153	27	106	31	6	27	59	12	-	2	-	118	-
50	14 x 51	-	11	100	-	121	148	87	45	18	70	85	153	27	106	31	6	27	59	12	-	2	-	118	-
63	00C	A2-A3	12	125	-	136	168	116	50	18	70	159	145	32	106	36	5.4	32	59	12	-	2	-	118	-
100 125	22x58	A4	13	135	268	148	184	116	54	18	125	141	179	36	127	40	5.4	36	62	20	8.5	2.5	19.5	162	141
125 160	00	-	13	135	268	148	184	126	54	18	125	141	189	36	127	40	5.4	36	62	20	8.5	2.5	19.5	162	141
CD 160 CD 200	-	A3-A4	13A	145	268	148	184	139	54	18	125	141	-	36	130	40	5.4	36	78	18	8.5	3	20	162	141
160	0	A4-B1-B2	14	145	268	190	240	136	64	18	125	174	229	50	140	54	5.4	50	62	20	8.5	2.5	19.5	162	141
200	-	B1-B2	15	154	345	234	294	146	86	25	125	185	251	60	162	64	6.4	60	84	32	11	2.5	19.5	195	166
250	1	B1-B2-B3	15	154	345	234	294	146	86	25	125	185	251	60	162	64	6.4	60	84	32	11	2.5	19.5	195	166

BS88 315 to 400 A (size B1-B2-B3-B4) - DIN 400 A (size 2)

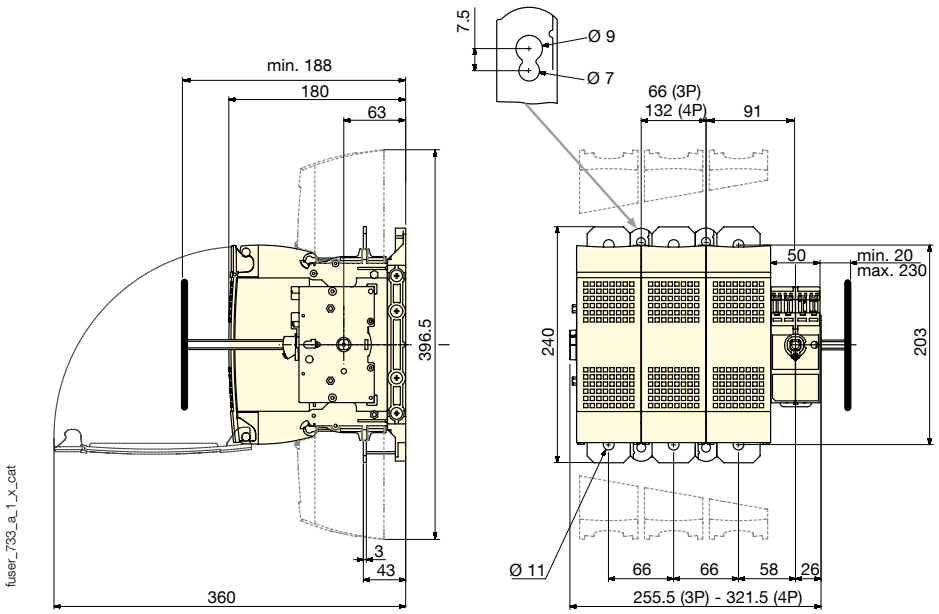

BS88 - External front operation fuse combination changeover

32 to 400 A

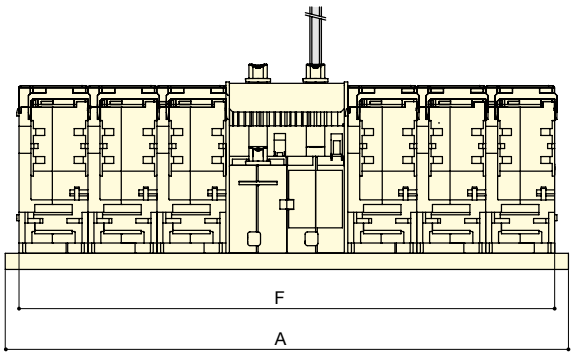

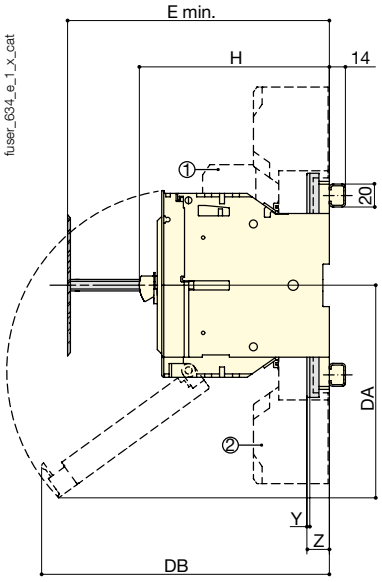

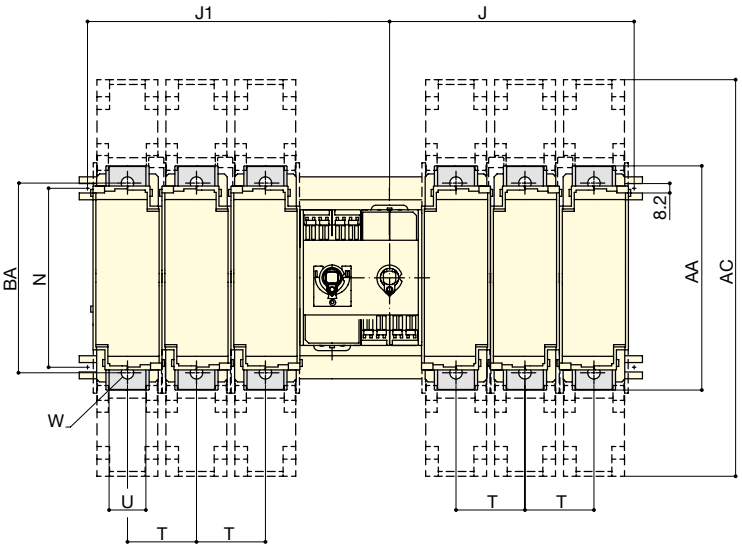

A. S1 handle: 32 and 63 A
B. S1 handle: 100 to 400 A
C. Door drilling

1. Fuse blown indicaion not available for BS88
2. Terminal shrouds

Rating (A)	Fuse size	Frame size	Dimensions				Terminal shrouds	Switch body									Switch mounting	Connection						
			A 3 P	A 4 P	E min	E max	AC	F 3 P	F 4 P	H	J 3 P	J 4 P	J1 3 P	J1 4 P	DA	DB	N	T	U	W	Y	Z	AA	BA
32	A1	11	264	318	100(1)	146(1)		242	296	87	102	129	138	165	85	153	90	27					118	
63	A2-A3	12	294	358	124	145		272	336	116.5	121	153	157	189	159	145	90	32					118	
100	A4	13	318	390	124	145	268	296	368	116(2)	133	169	169	205	141	179	128	36	20	8.5	2.5	19.5	162	141
CD 160	A3-A4	13 A	318	390	145	225	268	296	368	139	133	169	169	205			128	36	18	8.5	3	20	162	141
160	A4	14	402	502	124	225	268	380	480	136.5	176	226	212	262	174	229	128	50	20	8.5	2.5	19.5	162	141
160	B1-B2	14	402	502	130	225	268	380	480	136.5	176	226	212	262	174	229	128	50	20	8.5	2.5	19.5	162	141
CD 200	A3-A4	13 A	318	390	145	225	268	296	368	139	133	169	169	205			128	36	18	8.5	3	20	162	141
200	B1-B2	15	490	610	130	225	345	468	588	146	213	273	263	323	185	251	155	60	32	11	2.5	19.5	195	166
250	B1-B2-B3	15	490	610	154	225	345	468	588	146	213	273	263	323	185	251	155	60	32	11	2.5	19.5	195	166
315	B1-B2-B3	16	526	658	154	225	355	504	636	149	231	297	281	347	200	260	168	66	50	11	3	20	205	175
400	B1-B2-B3-B4	16	526	658	157	225	355	504	636	149	231	297	281	347	200	260	168	66	50	11	3	20	205	175

(1) 1 AC: + 23.5 mm / 2 AC: + 47 mm.
(2) 132 mm with 2 AC.

Dimensions (continued)

NFC and DIN - External front operation fuse combination changeover

50 to 400 A

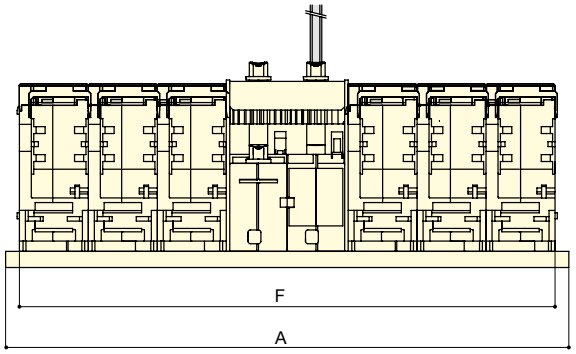

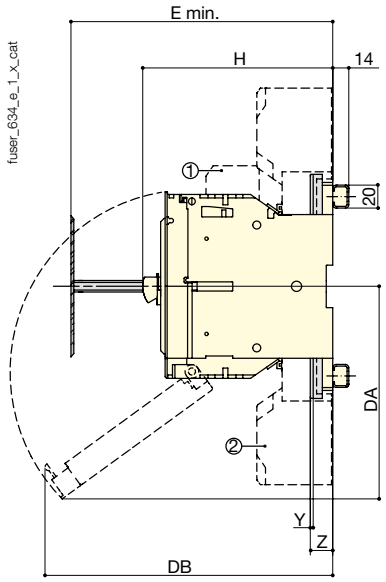

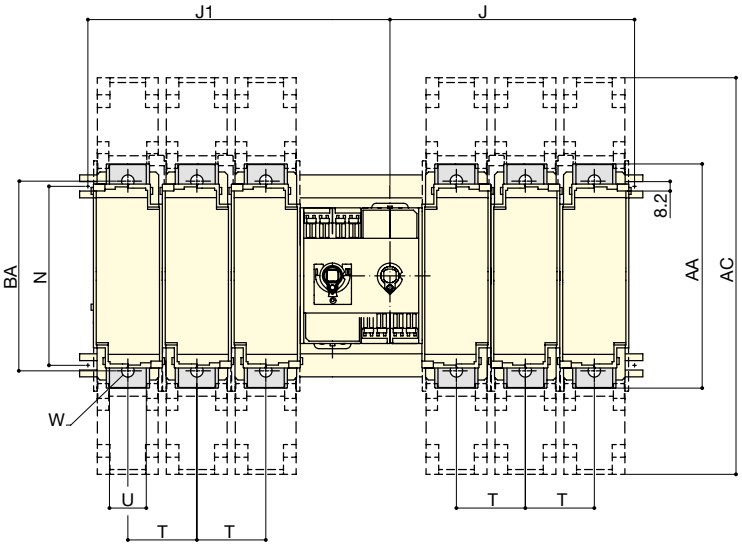

A. S1 handle: 50 and 63 A
B. S2 handle: 100 to 400 A
C. Door drilling

1. Fuse blown indicaion not available for BS88
2. Terminal shrouds

Rating (A)	Fuse size	Frame size	Overall dimensions A 3p	A 4p	E min	E max	Terminal shrouds AC	Switch body F 3 P	F 4 P	H	J 3 P	J 4 P	J1 3 P	J1 4 P	DA	DB	Switch mounting N	Connection T	U	W	Y	Z	AA	BA
50	14 x 51	11	264	318	100(1)	146(1)		121	148	87(1)	102	129	138	165	85	153	90	27					118	
63	00C	12	294	358	125	145		136	168	116.5(2)	121	153	158	189	159	145	90	32					118	
100	22 x 58	13	318	390	135	145	268	148	184	116(2)	133	169	169	205	141	187	128	36	20	8.5	2.5	19.5	162	141
125	22 x 58	13	318	390	135	145	268	148	184	116(2)	133	169	169	205	141	179	128	36	20	8.5	2.5	19.5	162	141
125	00	13	318	390	135	145	268	148	184	126.5	133	169	169	205	141	193	128	36	20	8.5	2.5	19.5	162	141
160	00	13	318	390	135	145	268	148	184	126.5	133	169	169	205	141	193	128	36	20	8.5	2.5	19.5	162	141
160	0	14	402	502	145	225	268	190	240	136.5	176	226	212	262	174	229	128	50	20	8.5	2.5	19.5	162	141
250	1	15	490	610	154	225	345	234	294	146	213	273	263	323	185	251	155	60	32	11	2.5	19.5	195	166
400	2	16	526	658	157	225	355	252	318	149	231	297	281	347	200	260	168	66	50	11	3	20	205	175

(1) 1 AC: +23.5 / 2 AC: +47
(2) 132 with 2 AC

Direct operation

NFC CD 25 to CD 32 A in frame size 0 / fuse size 10 x 38

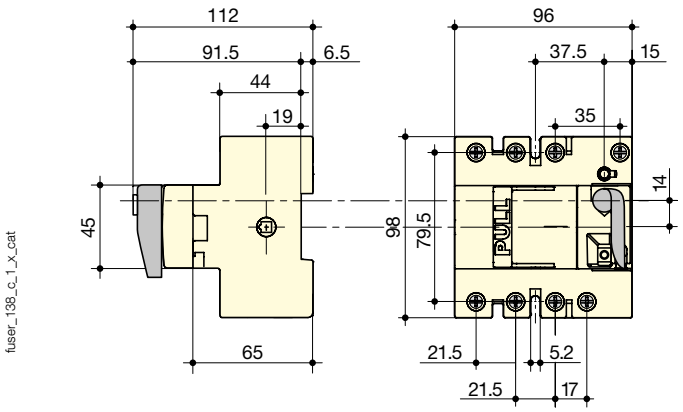

BS88 CD 20 to CD 32 A in frame size 0 / fuse size A1 - NFC CD 32 A in frame size 0 / fuse size 14 x 51

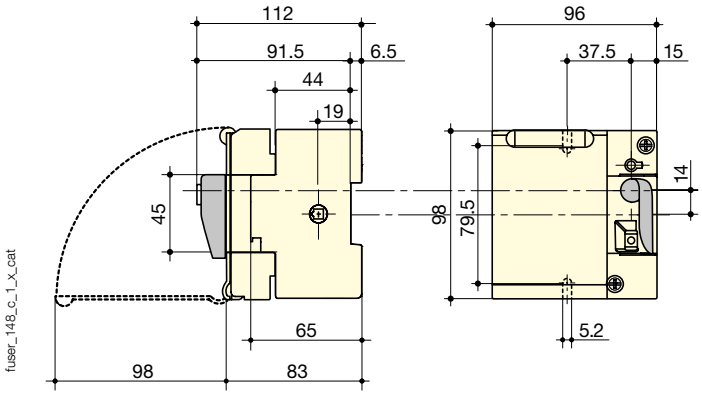

Dimensions (continued)

Direct operation (continued)

BS88 32 to 400 A - NFC and DIN 50 to 400 A

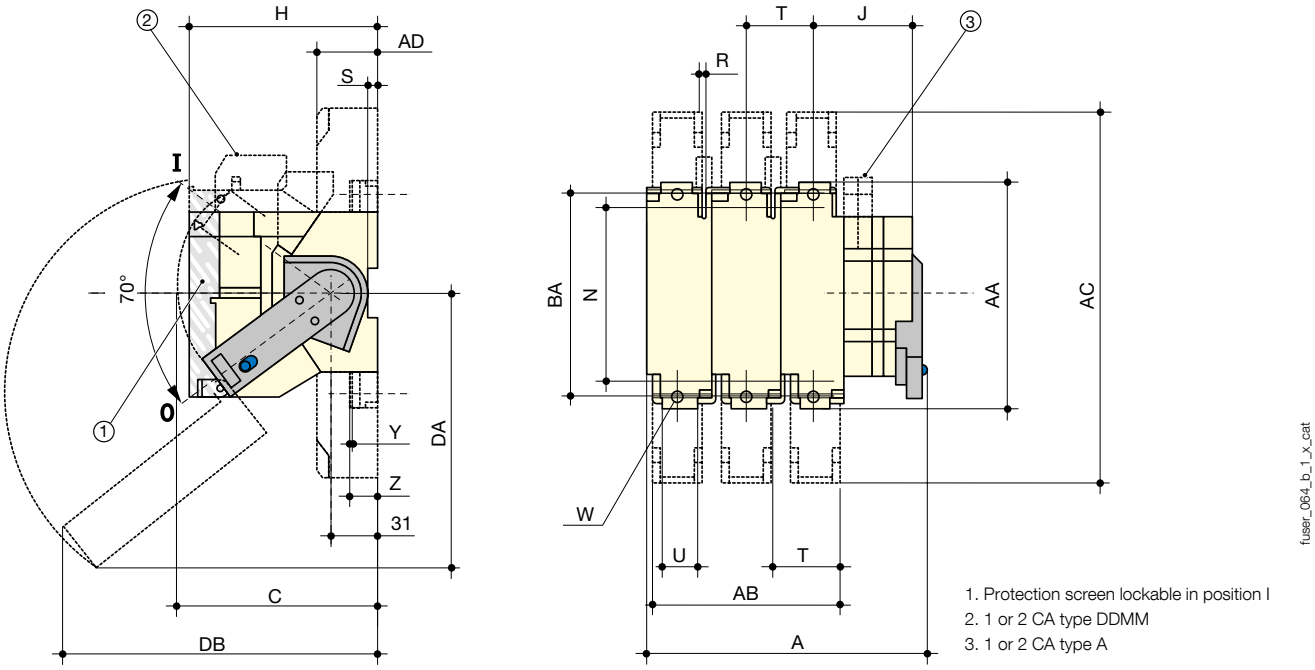

1. Protection screen lockable in position I
2. 1 or 2 CA type DDMM
3. 1 or 2 CA type A

Rating (A)	NFC/DIN Fuse size	BS88 Fuse size	Frame size	Overall dimensions			Terminal shrouds				Switch body				Switch mounting			Connection						
				A 3p.	A 4p.	C	AB 3p.	AB 4p.	AC	AD	H	J	DA	DB	N	R	S	T	U	W	Y	Z	AA	BA
32	-	A1	1	118	145	134	-	-	-	-	87	33.5	-	-	106	5.4	6.5	27	-	-	-	-	118	-
50	14 x 51	-	1	118	145	134	-	-	-	-	87	33.5	-	-	106	5.4	6.5	27	-	-	-	-	118	-
63	00C	A2-A3	2	133	165	134	-	-	-	-	116	36	159	145	106	5.4	6.5	32	-	-	-	-	118	-
100	22 x 58	A4	3	150	186	173	108	144	268	44	116	38	-	-	127	5.4	-	36	20	8.5	2.5	19.5	162	141
125	22 x 58	-	3	150	186	173	108	144	268	44	116	38	-	-	127	5.4	-	36	20	8.5	2.5	19.5	162	141
125	00	-	3	150	186	173	108	144	268	44	126	38	141	193	127	5.4	-	36	20	8.5	2.5	19.5	162	141
160	00	-	3	150	186	173	108	144	268	44	126	38	141	189	127	5.4	-	36	20	8.5	2.5	19.5	162	141
CD 160	-	A3-A4	3A	152	188	173	108	144	268	44	139	38	-	-	130	5.4	-	36	20	8.5	3	19.5	162	141
160	-	A4	4	192	242	173	136	172	268	44	136	45	174	229	140	5.4	-	50	20	8.5	2.5	19.5	162	141
160	0	B1-B2	4	192	242	173	136	172	268	44	136	45	174	229	140	5.4	-	50	20	8.5	2.5	19.5	162	141
CD 200	-	A3-A4	3A	152	188	173	108	144	268	44	139	38	-	-	30	5.4	-	36	20	8.5	3	19.5	162	141
200	-	B1-B2	5	253	313	173	180	240	345	65	146	81	185	251	162	6.4	-	60	32	11	2.5	19.5	195	166
250	1	B1-B2-B3	5	253	313	173	180	240	345	65	146	81	185	251	162	6.4	-	60	32	11	2.5	19.5	195	166
315		B1-B2-B3	6	253	313	173	180	240	355	65	146	81	185	251	162	6.4	-	66	32	11	2.5	19.5	195	175
400	2	B1-B2-B3-B4	6	271	337	173	192	258	355	65	149	86	200	260	172	6.4	-	66	50	11	3	20	205	175

External and direct operation

BS88 630 to 800 A - DIN 630 to 1250 A

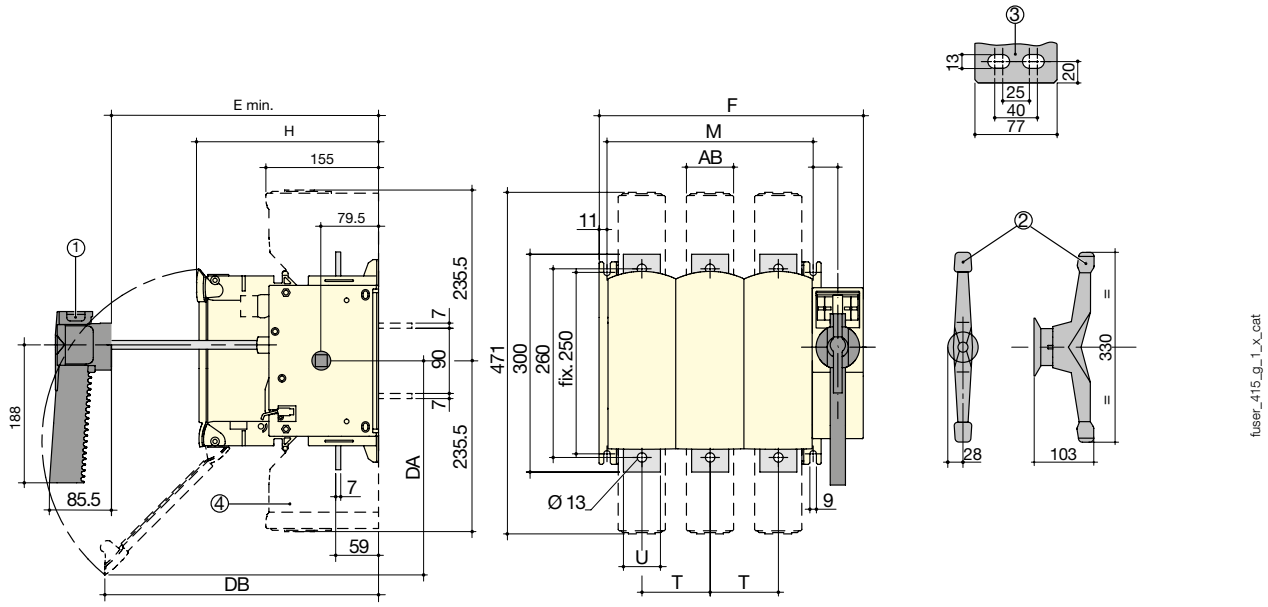

1. For handle frame size 17.
2. For handle frame size 18.
3. Connection terminals for frame size 18.
4. Terminal shrouds.

Rating (A)	DIN Fuse size	BS88 Fuse size	Frame size	Overall dimensions E min	Switch body F 3p.	Switch body F 4p.	Switch body H	Switch body DA	Switch body DB	Switch mounting M 3p.	Switch mounting M 4p.	Connection T	Connection U	Terminal shrouds AB
630	3	C1-C2	17	265	364	458	250	300	380	284	378	94	51	65
800	3	C1-C2-C3	17	265	364	458	250	300	380	284	378	94	51	65
800	4	-	18	304	442	562	289	355	295	362	482	120	77	88
1250	4	D1	18	304	442	562	289	355	295	362	482	120	77	88

Dimensions for external operation handles

BS88 - 32 to 63 A - NFC and DIN - 25 to 63 A

Handle type	Front operation		Side operation	
	Direction of operation	Door drilling	Direction of operation	Door drilling
S1 type Box size 0	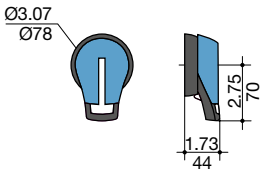	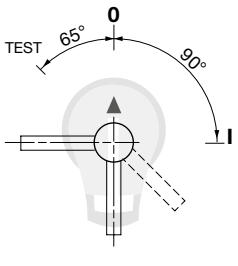	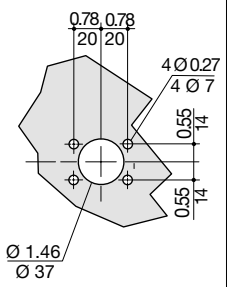	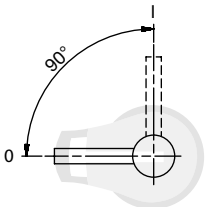	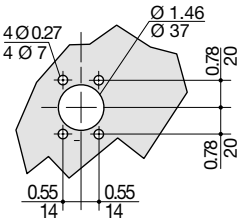

fuser_712_a_1_gb_cat

BS88 / NFC and DIN - 100 to 400 A

Handle type	Front operation		Side operation	
	Direction of operation	Door drilling	Direction of operation	Door drilling
S2 type Box size 11-16	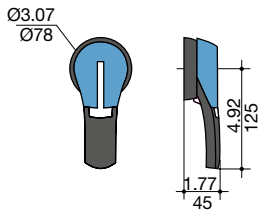	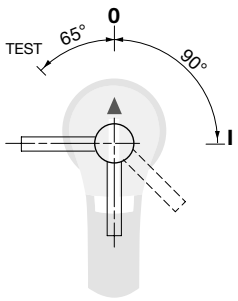	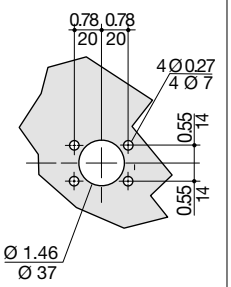	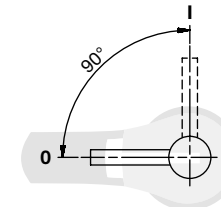	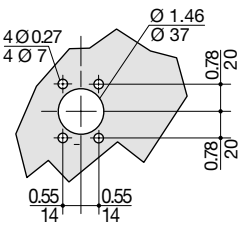

fuser_713_a_1_gb_cat

BS88 / NFC and DIN - 630 to 800 A

Handle type	Front operation		Side operation	
	Direction of operation	Door drilling	Direction of operation	Door drilling
S3 type Box size 17	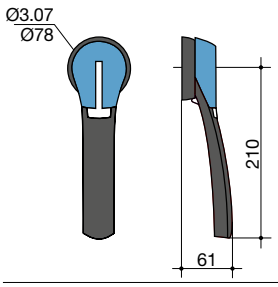	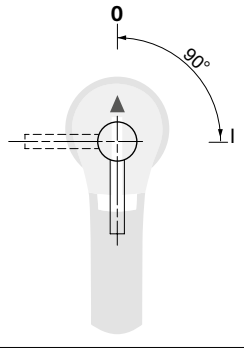	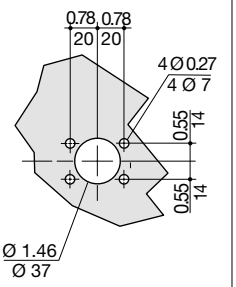	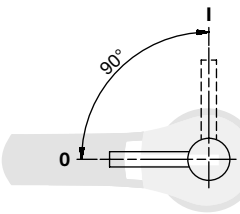	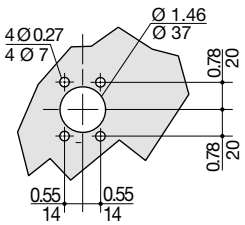

fuser_714_a_1_gb_cat

socomec
Innovative Power Solutions

BS88 / NFC and DIN - 800 to 1250 A

Handle type	Front operation Direction of operation	Side operation Direction of operation	Door drilling
S3 type Box size 18 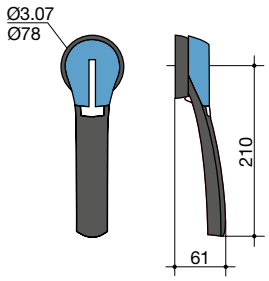		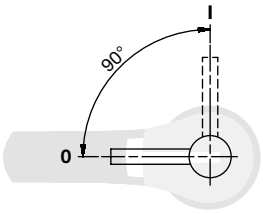	
S4 type 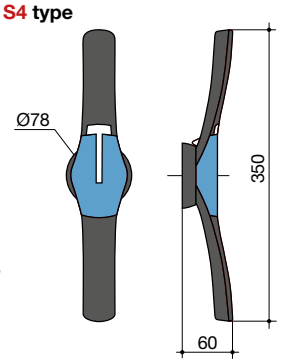	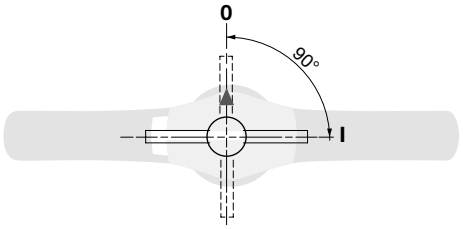		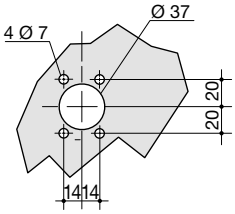

fuser_715_a_1_gb_cat