ifm electronic

Operating instructions
Ultrasonic diffuse reflective sensors

efector230

UK

**UGB**
**UGC**

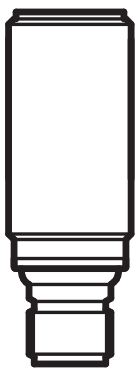

80237715 / 00 04 / 2016

# 1 Preliminary note

## 1.1 Symbols used

▶ Instructions

> Reaction, result

→ Cross-reference

Important note
Non-compliance may result in malfunction or interference.

Information Supplementary note.

# 2 Safety instructions

- Installation, electrical connection, set-up, operation and maintenance of the unit must be carried out by qualified personnel authorised by the machine operator.

# 3 Functions and features

Ultrasonic sensors detect objects of various materials without any contact. Depending on the selected sensor, detected objects are signalled via switching output or their distance is indicated by means of a proportional analogue signal.

# 4 Installation

**UGBxxx / UGCxxx**

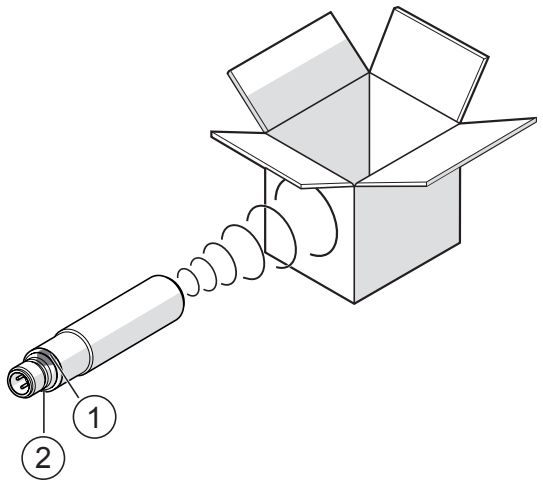


1: Status LED (yellow) 2: Echo LED (green)

▶ Position object.

▶ Align the ultrasonic sensor so that it directly faces the object or the background and secure it to a bracket.

> Object / background is detected when the echo LED (green) lights.

Sound-absorbing surfaces have a negative effect on a reliable function.

During installation of the device, consider the blind zone.

## 5 Electrical connection

▶ Disconnect power.

▶ Connect device (depending on the type selected)

| Core colours | |
|---|---|
| BK | Black |
| BN | Brown |
| BU | Blue |
| WH | White |

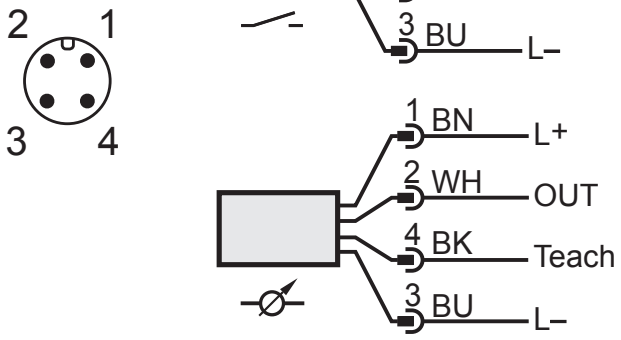


| Units with binary output |
|---|
| OUT: Switching output<br>Teach: Programming wire |
| **Units with analogue output** |
| OUT: Analogue output<br>Teach: Programming wire |

Colours to DIN EN 60947-5-2

Technical data and further information at → www.ifm.com

## 6 Set-up

Note the LED behaviour for the set-up:

| Echo LED green | |
|---|---|
| On | Echo is received. |
| Off | No echo (object / background not detected). |
| Off | For the time of resetting to factory setting. |

| Status LED yellow | | |
|---|---|---|
| | LED | Function acknowledgement |
| Flashes 1 Hz | x | Programming mode active. |
| Flashes 2.5 Hz | x | Setting distance P1 completed. |
| Flashes 4 Hz | x | Setting distance P2 completed or assignment acknowledgement of the setting. |
| Flashes 10 Hz | x | Inverting the switching characteristics. |

# 7 Wire programming

| Unit with switching output: Teach with L+. | Unit with analogue output: Teach with L-. |
|---|---|
| 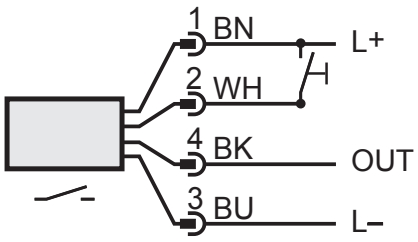 | 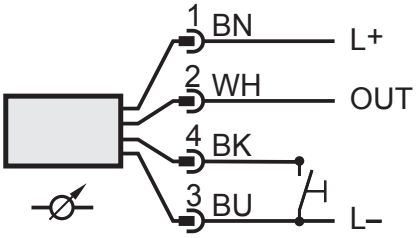 |



# 8 Settings

- ▶ Start programming mode of the device.
- ▶ Connect teach input, 2 s...6 s → 7 Wire programming.
- > LED flashes (1 Hz).

If programming has not been completed successfully, the device returns to the previous setting.

## 8.1 Window function, distance P1 > P2

- ▶ Object in position P1.
- ▶ Connect teach input approx. 1 s.
- > LED flashes (2.5 Hz).
- ▶ Object in position P2.
- ▶ Connect teach input approx. 1 s.
- > LED flashes (4 Hz).

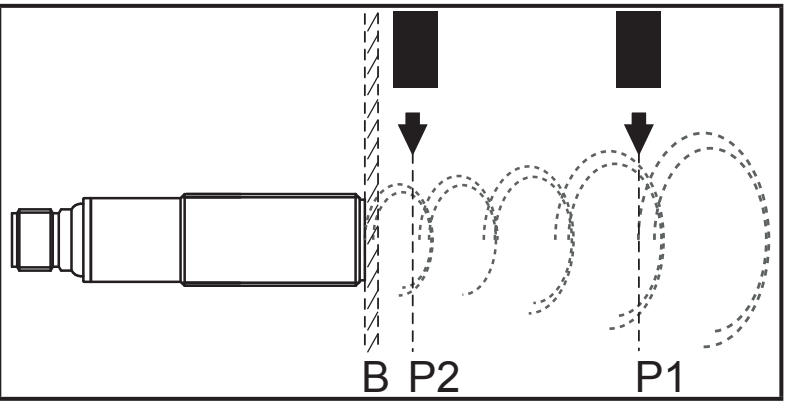



Output response:
Units with switching outputs.

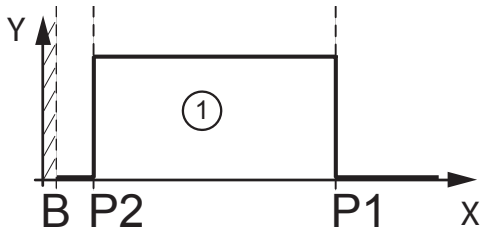



Output response:
Units with analogue output.

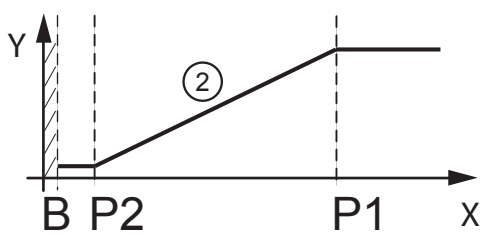



| | | | |
|---|---|---|---|
| X: | Distance | B: | Blind zone |
| Y: | Output response | P1: | Setting point 1 (OUTx) |
| ①: | OUT1 (switching output) | P2: | Setting point 2 (OUTx) |
| ②: | OUT2 (analogue output) | | |

## 8.2 Hysteresis function, distance P1 = P2

▶ Object in position P1.
▶ Connect teach input approx. 1 s.
> LED flashes (2.5 Hz).
▶ Object in position P2.
▶ Connect teach input approx. 1 s.
> LED flashes (4 Hz).

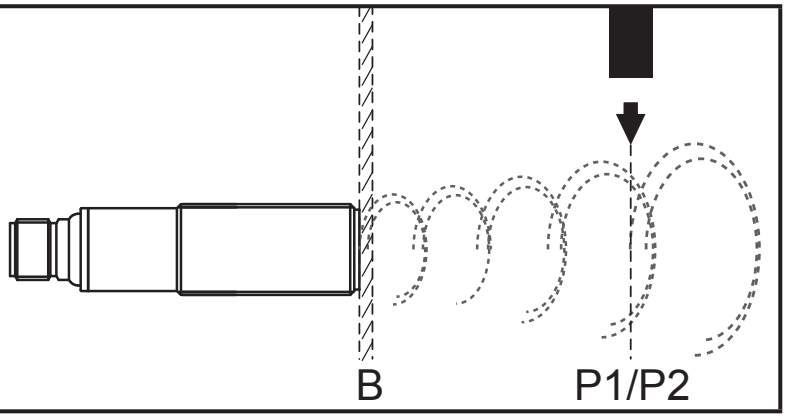


Output response:
Units with switching outputs.

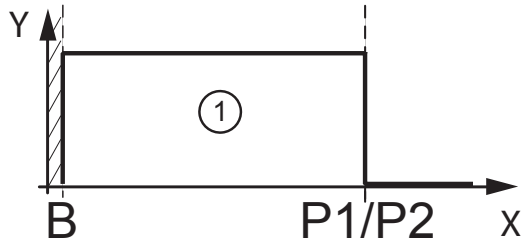


Output response:
Units with analogue output

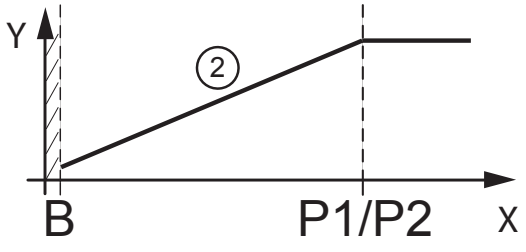


UK

## 8.3 Inverting the output response

▶ Connect teach input > 6 s → 7 Wire programming.
> LED flashes (> 10 Hz).

Inverted output function (switching output: NO changes to NC or vice versa / Analouge output: low...high signal changes to wird high... low signal or vice versa).

## 8.4 Restore factory setting

▶ Align the device so that no echo is received.
▶ Go into the programming mode of the unit.
▶ Connect teach input 1 s → 7 Wire programming.
> LED flashes shortly with 4 Hz.

# 9 Operation

▶ Check whether the unit operates correctly.
> Display by LEDs:

| | |
|---|---|
| Green LED is lit. | Echo is received. |
| Yellow LED is lit | Output is switched / object is into the teached operating range . |
| Green LED flashes | Short circuit at the output. |

The minimum distance between the “Proximity Switch Metal Enclosure“ and any “External uninsulated live part“ shall be at least 12.7 mm.