HENGSTLER

TECHNICAL DATASHEET

Absolute Encoder AC 58 - Profibus



hubshaft with tether

- Diagnostic LED
- Cable or M12 connector
- Output of speed, acceleration
- Programmable: Resolution, Preset, Direction, Operation time
- Option: Display "tico"
- Address via interface parameterizable (optional)

TECHNICAL DATA
mechanical

Housing diameter	58 mm
Shaft diameter	6 mm / 10 mm (Solid shaft) 10 mm / 12 mm (Hub shaft)
Flange (Mounting of housing)	Synchro flange, Clamping flange, Tether, Square flange
Protection class shaft input (EN 60529)	IP64 or IP67
Protection class housing (EN 60529)	IP67
Shaft load axial / radial	40 N / 60 N
Axial endplay of mounting shaft (hubshaft)	± 1.5 mm
Radial runout of mating shaft (hubshaft)	± 0.2 mm
Max. speed	max. 10 000 rpm (continuous), max. 12 000 rpm (short term)
Starting torque typ. [1]	≤ 0.01 Nm
Moment of inertia	ca. 3.8 x 10^{-6} kgm²
Vibration resistance (DIN EN 60068-2-6)	100 m/s² (10 ... 500 Hz)
Shock resistance (DIN EN 60068-2-27)	1000 m/s² (6 ms)
Operating temperature	-40 °C ... +85 °C
Storage temperature	-40 °C ... +85 °C
Material shaft	Stainless Steel
Material housing	Aluminum
Weight	approx. 350 g (ST) / 400 g (MT)
Connection	Bus cover with 3 sealed cable exits Bus cover with 2x M23 connectors (Conin), 12 pole Bus cover with 3x M12 connector Bus cover with 2 sealed cable exits + 1 x M12 connector for "tico" display, 4 pole

[1] at 20°C

TECHNICAL DATA
electrical

General design	as per DIN EN 61010-1, protection class III, contamination level 2, overvoltage class II
Supply voltage	DC 10-30 V
Max. current w/o load	220 mA (ST), 250 mA (MT)
EMC	EN 61326: Class A
Resolution singleturn	10 - 14 Bit
Resolution multiturn	12 Bit

TECHNICAL DATASHEET

Absolute Encoder AC 58 - Profibus

TECHNICAL DATA
electrical (continued)

Output code	Binary
Drives	RS 485
Linearity	± ½ LSB (± 1 LSB for resolution 13, 14, 25, 26 Bit)
Profile/ protocol	Profibus DP with encoder profile class C2 (parameterizable)
Programmable	Resolution, Preset, Direction
Integrated special functions	Speed, Acceleration, Operating time
Baud rate	is automatically set within a range of 9.6 KBaud through 12 MBaud
Device address	adjustable with DIP switches, via fieldbus (optional)
Bus termination resistor	set via DIP switches

STARTUP (The encoder can be easily and quickly installed and programmed with the GSD file.)

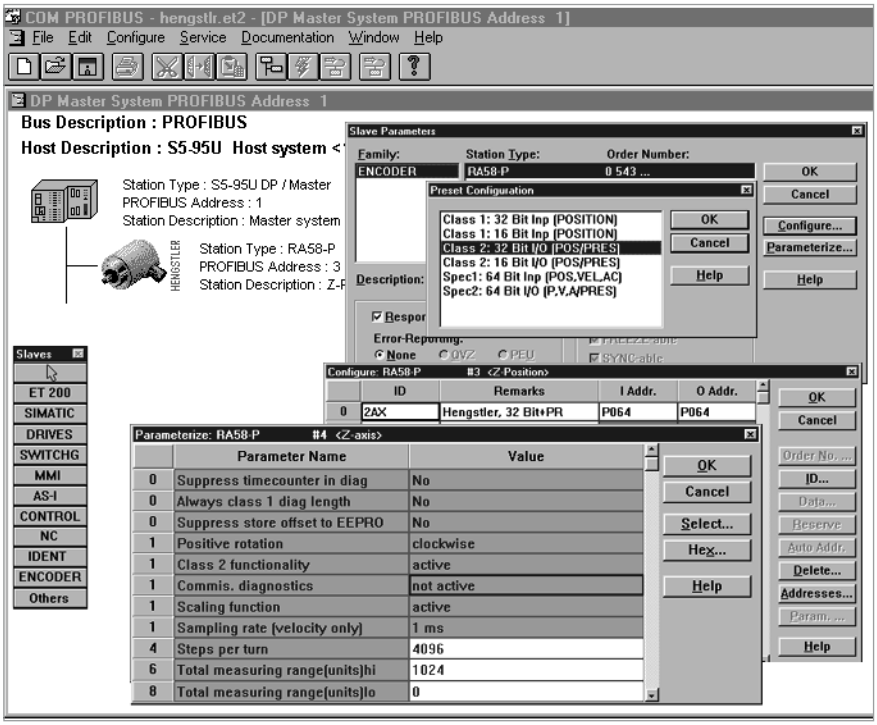

ELECTRICAL CONNECTIONS
Bus cover with 2x M23 connectors (Conin), 12 pole

Pin	IN (pins)	OUT (socket)	Description
1		GND [1]	Data Ground (M5V) [1]
2	A	A	Receive/Transmit Data-Negative (A)
3			
4	B	B	Receive/Transmit Data-Positive (B)
5			
6		VCC [1]	+5 V signal output (P5V) [1]
7	DC 10 - 30 V	DC 10 - 30 V	Supply voltage $+U_B$ (P24)
8	0 V	0 V	Supply voltage Ground (M24)
9			
10			
11			
12			
screen	screen	screen	screen connected with encoder housing

[1] can be used as power supply for an external bus termination resistor

TECHNICAL DATASHEET

Absolute Encoder AC 58 - Profibus

ELECTRICAL CONNECTIONS
Bus cover with 3x M12

Pin	Connector 1	Connector 2	Socket
1		UB in	+5 V signal output (P5V) [1]
2	A in		A out
3		0 V in	Data Ground (M5V) [1]
4	B in		B out
5	screen	screen	screen

[1] can be used as power supply for an external bus termination resistor

ELECTRICAL CONNECTIONS
Bus cover with 3 sealed cable exits

Connecting Terminal	Signal
1	UB in (DC 10 - 30V)
2	0 V in
3	UB out
4	0 V out
5	B in
6	A in
7	B out
8	A out

TECHNICAL DATASHEET

Absolute Encoder AC 58 - Profibus

DIMENSIONED DRAWINGS

Bus covers

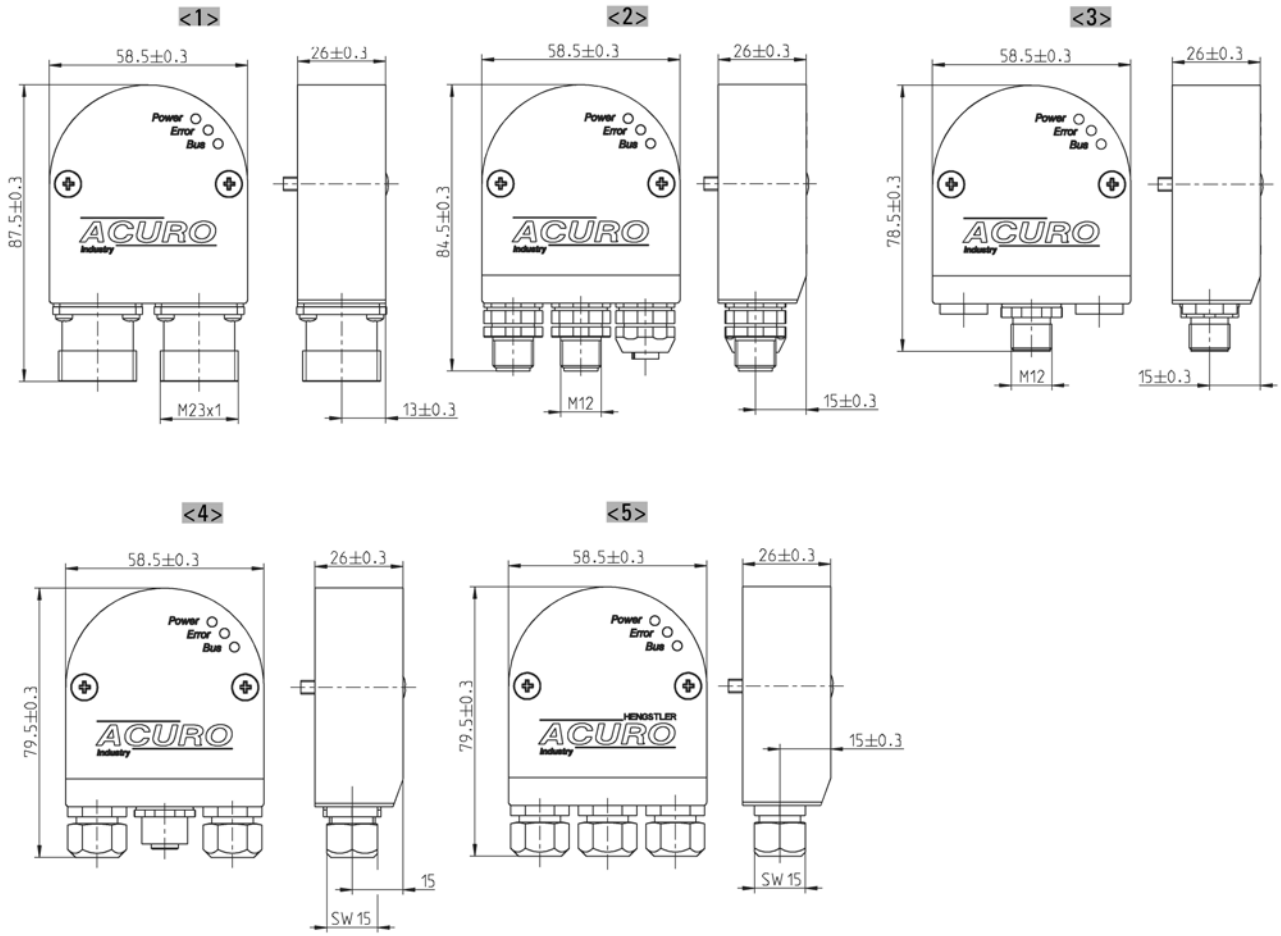

<1> Connection "I"
<2> Connection "R"
<3> Connection "S"
<4> Connection "T"
<5> Connection "Z"

Dimensions in mm

DIMENSIONED DRAWINGS (continued)

Synchro flange "S"

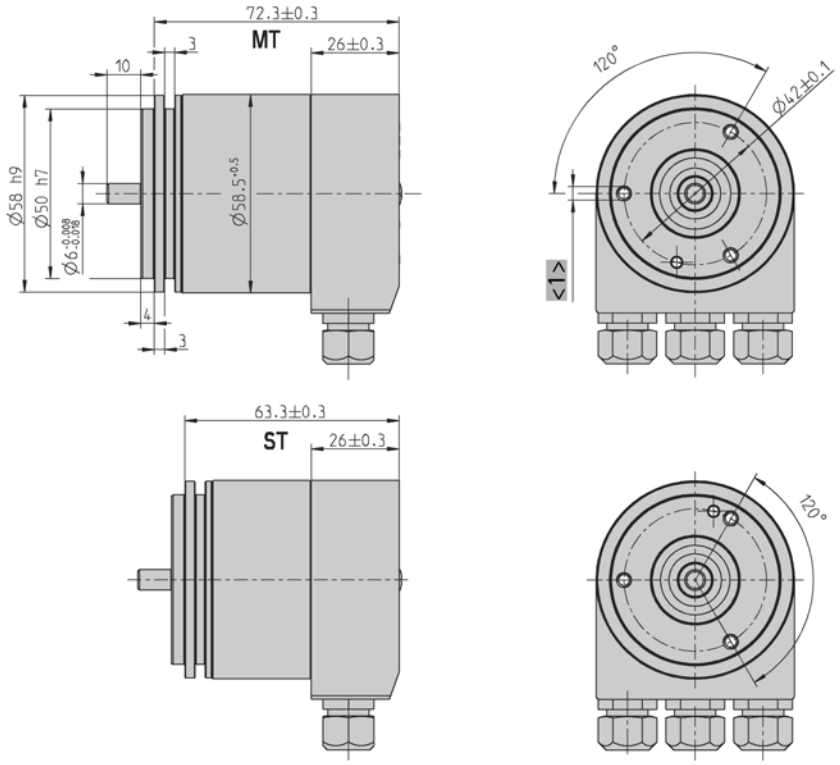

<1> 3xM4 (6 deep)

Dimensions in mm

DIMENSIONED DRAWINGS (continued)

Clamping flange "K"

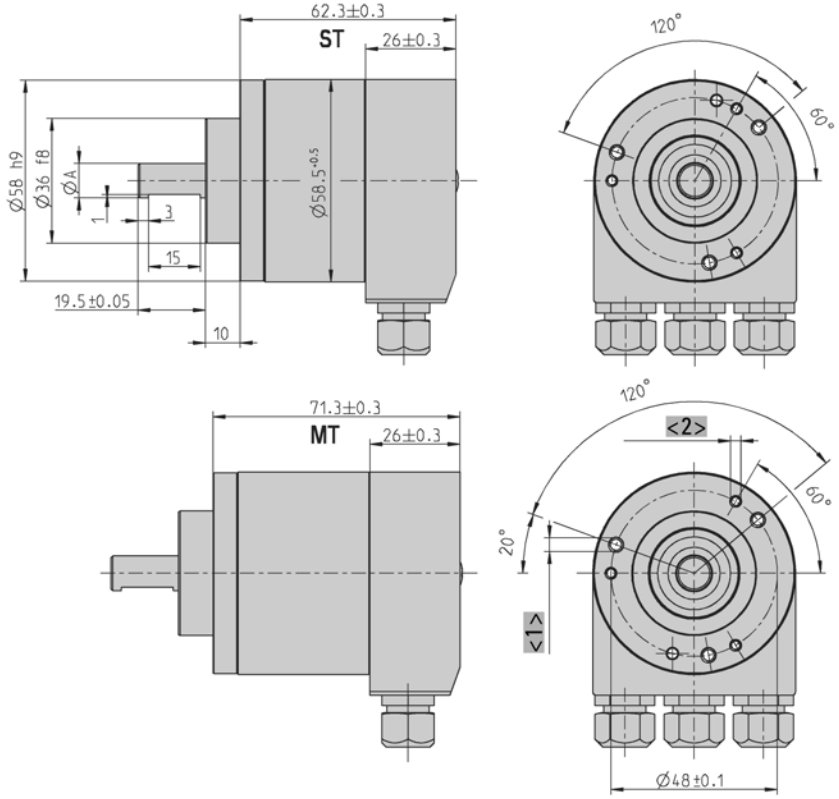

	Dim.		Unit
Shaft Ø A	10 $^{-0.01/-0.02}$	9.52 $^{-0.01/-0.02}$	mm
Shaft code	"2"	"6"	

<1> 3xM4 (6 deep)
<2> 3xM3 (6 deep)

Dimensions in mm

DIMENSIONED DRAWINGS (continued)

Hollow shaft "F"

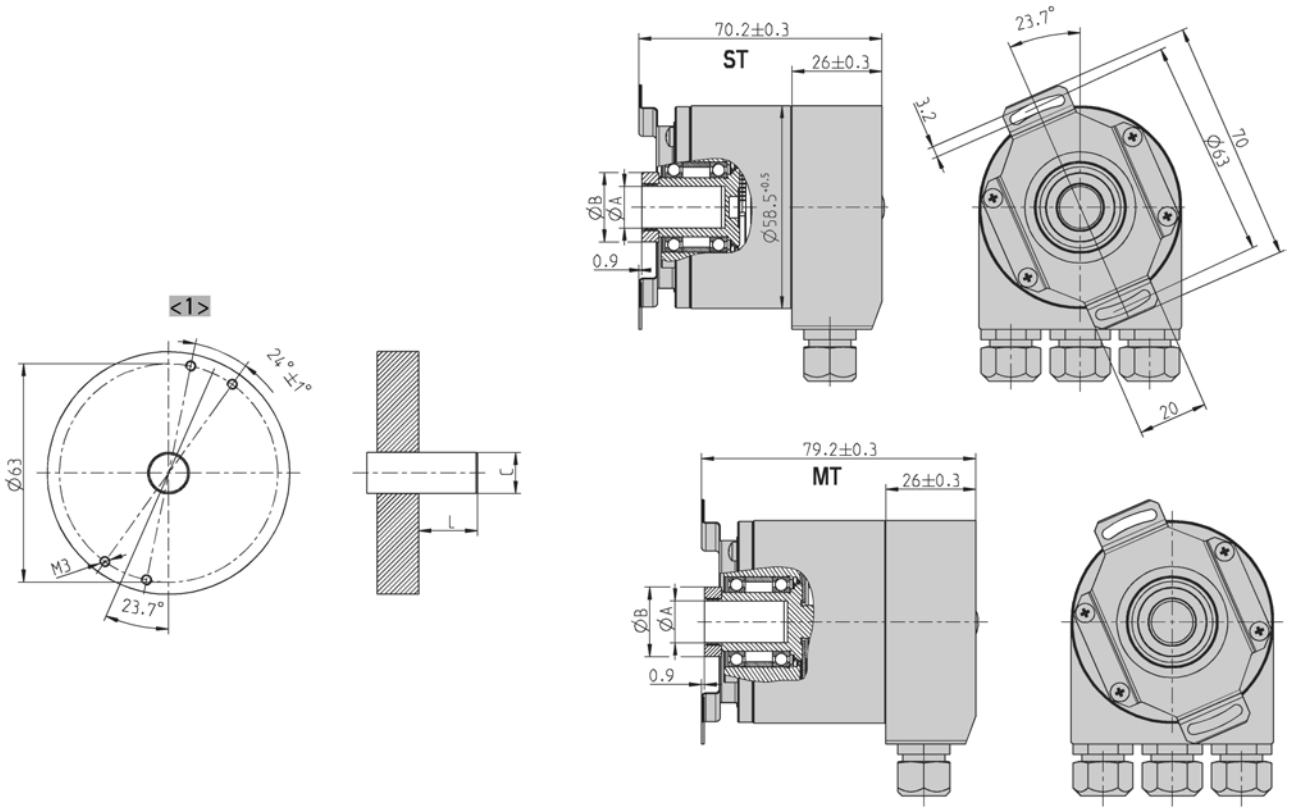

	Dim.				Unit
Hollow shaft Ø A	10 +0.012	12 +0.012	9,52 +0.012	12,7 +0.012	mm
Connecting shaft Ø C	10 g7	12 g7	9,52 g7	12,7 g7	mm
Clamping ring Ø B	18	20	18	22	mm
L_{min}	15	18	15	18	mm
L_{max}	20	20	20	20	mm
Shaft code	"2"	"7"	"6"	"E"	
L = Inside length of connection shaft					

<1> Customer side

Dimensions in mm

Absolute Encoder AC 58 - Profibus

DIMENSIONED DRAWINGS (continued)

Square flange "Q"

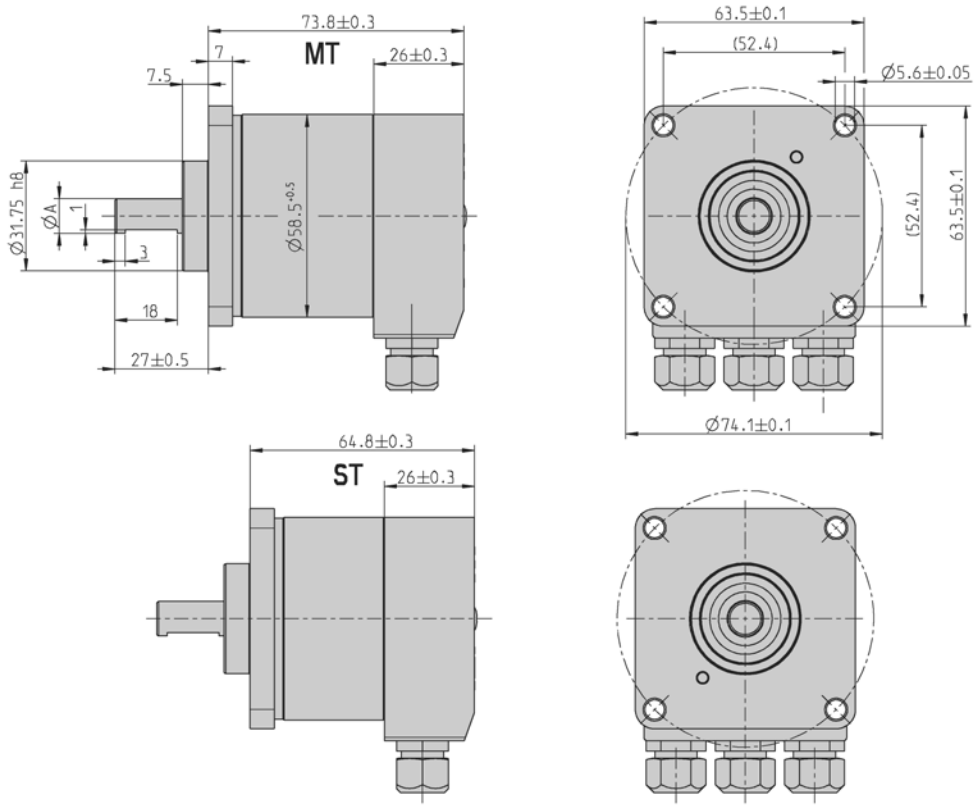

	Dim.		Unit
Shaft Ø A	10 -0.01/-0.02	9.52 -0.01/-0.02	mm
Shaft code	"2"	"6"	

Dimensions in mm

TECHNICAL DATASHEET

Absolute Encoder AC 58 - Profibus

ORDERING INFORMATION

Type	Resolution	Supply voltage	Flange, Protection, Shaft	Interface	Connection
AC58	**0010** 10 Bit ST **0012** 12 Bit ST **0013** 13 Bit ST **0014** 14 Bit ST **1212** 12 Bit MT + 12 Bit ST **1213** 12 Bit MT + 13 Bit ST **1214** 12 Bit MT + 14 Bit ST	**E** DC 10 - 30 V	**S.41 Synchro, IP64, 6 mm** **S.71 Synchro, IP67, 6 mm** **K.42 Clamping, IP64, 10 mm** **K.46** Clamping, IP64, 9.52 mm **K.72 Clamping, IP67, 10 mm** **K.76** Clamping, IP67, 9.52 mm **F.46** Spring tether, IP64, hubshaft 9.52 mm, mounting with clamping ring front **F.42 Spring tether, IP64, hubshaft 10 mm, mounting with clamping ring front** **F.47 Spring tether, IP64, hubshaft 12 mm, mounting with clamping ring front** **Q.46** Square, IP64, 9.52 mm **Q.42** Square, IP64, 10 mm **Q.76** Square, IP67, 9.52 mm **Q.72** Square, IP67, 10 mm	**DP** Profibus	**I** Bus cover with 2x M23 connector (Conin), 12 pole, radial, cw **R** Bus cover with 3x M12 **T** Bus cover with 2 sealed cable exits + 1 x M12 connector for "tico" display, 4 pole **Z** Bus cover with 3 sealed cable exits

Preferably available versions are printed in bold type.

TECHNICAL DATASHEET

Absolute Encoder AC 58 - Profibus Accessories

FLEXIBLE COUPLINGS


Bellows coupling


Disk coupling


Helical coupling


Isolated disk coupling

		Ordering code
Bellows coupling	10 mm / 10 mm	3 520 037
Bellows coupling	6 mm / 6 mm	3 520 068
Bellows coupling	8 mm / 10 mm	3 520 077
Disk coupling	6 mm / 6 mm	0 070 663
Helical coupling 19/28	5 mm / 6 mm	3 520 035
Helical coupling 19/28	6 mm / 6 mm	0 070 653
Helical coupling 19/28	6 mm / 6.35 mm	3 520 051
Helical coupling 25/32	6 mm / 9.53 mm	3 520 052
Helical coupling 25/32	6 mm / 10 mm	3 520 066
Helical coupling 25/32	10 mm / 12 mm	3 520 065
Helical coupling 25/32	10 mm / 10 mm	3 520 074
Isolated disk coupling	6 mm / 6 mm	3 520 081
Isolated disk coupling	6 mm / 10 mm	3 520 082
Isolated disk coupling	10 mm / 10 mm	3 520 088

MOUNTING

	Ordering code
Clamping eccentric, For M4 (set of three)	1 522 300
Clamping eccentric for synchro flange, d6,5 for M3 (set of three)	0 070 655
Fastening angle (plastic), for clamping flange RI 58, AC 58 (fastening material included)	1 522 329
Mounting bell (plastic), for synchro flange RI 58, AC 58 (clamping eccentric and fastening material included)	1 522 330
Square flange adapter 58 x 58 mm, for clamping flange RI 58, AC 58 (fastening material included)	1 522 326
Square flange adapter 80 x 80 mm, for clamping flange RI 58, AC 58 (fastening material included)	1 522 327
Synchro flange adapter , for clamping flange RI 58, AC 58 (fastening material included)	1 522 328
Torque support	1 531 188

CONNECTORS

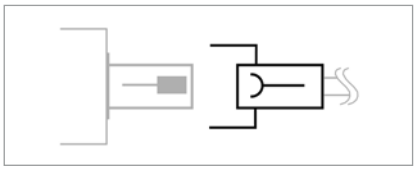

Connector (socket) matching with encoder connector	Ordering code
M23 (Conin), 12 pole, PG9, cw, mating connector for connection C/D/-I	3 539 202

TECHNICAL DATASHEET

Absolute Encoder AC 58 - Profibus
Accessories

CONNECTORS

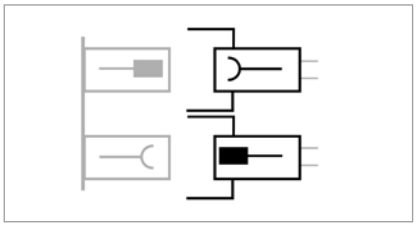

Connector for connecting bus cover with 2x M23	Ordering code
M23 (Conin), 12 pole, PG9, cw, pins	3 539 186
M23 (Conin), 12 pole, PG9, cw, socket	3 539 202

DISPLAYS

	Ordering code
"Tico" display for connection T	0 731 205
Connection cable bus cover (connection T) to "tico", 1.5 m	3 539 516

TECHNICAL MANUALS

	Ordering code
Technical manual, English	2 565 255 (or homepage)
Technical manual, German	2 565 090 (or homepage)

SOFTWARE

	Ordering code
GSD-file, as download from our homepage	www.hengstler.com