# Industrial Gland Kits

# A1/A2 Brass Gland Kit KM409 Series

## Application

> Indoor/Outdoor for Unarmoured Cable

## Features & Benefits

> Brass indoor and outdoor cable gland & accessories
> For circular, unarmoured plastic or rubber sheathed cables
> Suitable for most climatic conditions, weatherproof and waterproof
> Kit comprises: - A1/A2 Gland
- Brass locknut
- PVC shroud
> 2 per kit size up to and including 25mm

## Technical Data

> EN 50262
> BS6121:Pt 1:1989
> Gland rated to IP66 with use of suitable sealing washer or thread sealant at gland interface
> Service temperature -20°C to +90°C
> CuZn39Pb3 extruded brass alloy used for guaranteed strength and performance





**Prysmian Cables & Systems Limited**, Components Unit, Oak Road, Wrexham Industrial Estate, Wrexham, LL13 9HP, UK
**Commercial Enquiries**, Tel +44 (0) 845 767 8345, Fax: +44 (0) 23 8029 5465
www.prysmian.co.uk

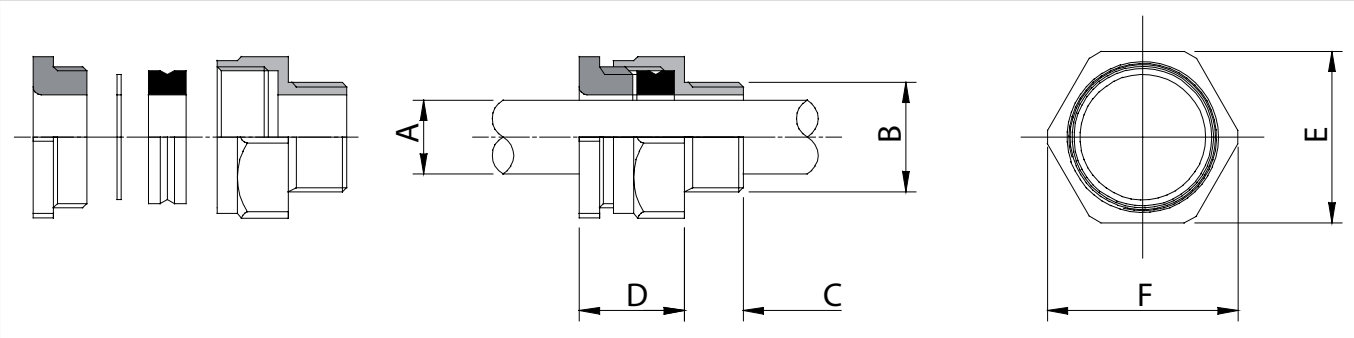


## Gland Details

| Cable Dimensions mm | | Kit Reference | | | Gland Dimensions mm | | | | |
|---|---|---|---|---|---|---|---|---|---|
| Overall Diameter A | | Size | Design Number | Items Per Kit | Entry Thread | | Approx. Length from Shoulder D mm | Hexagon Size | |
| Min | Max | | | | Size B | Length C | | Across Flats E | Across Corners F |
| 3.5 | 8.5 | 20SS | KM409-71 | 2 | M20×1.5 | 10 | 20 | 22.0 | 24.9 |
| 8.0 | 11.5 | 20S | KM409-52 | 2 | M20×1.5 | 10 | 22 | 22.0 | 24.9 |
| 11.0 | 13.5 | 20 | KM409-53 | 2 | M20×1.5 | 10 | 22 | 24.0 | 26.8 |
| 13.0 | 19.5 | 25 | KM409-55 | 2 | M25×1.5 | 10 | 25 | 30.5 | 34.0 |
| 19.0 | 25.5 | 32 | KM409-56 | 1 | M32×1.5 | 10 | 25 | 42.4 | 48.0 |
| 25.0 | 32.0 | 40 | KM409-57 | 1 | M40×1.5 | 15 | 33 | 47.2 | 53.6 |
| 31.5 | 37.0 | 50S | KM409-58 | 1 | M50×1.5 | 15 | 30 | 55.0 | 60.0 |
| 36.5 | 43.0 | 50 | KM409-59 | 1 | M50×1.5 | 15 | 30 | 56.4 | 61.5 |
| 42.5 | 50.0 | 63S | KM409-60 | 1 | M63×1.5 | 15 | 34 | 70.1 | 77.2 |
| 49.5 | 55.0 | 63 | KM409-61 | 1 | M63×1.5 | 15 | 32 | 75.0 | 83.0 |
| 54.5 | 61.0 | 75S | KM409-62 | 1 | M75×1.5 | 15 | 32 | 80.0 | 87.4 |
| 60.5 | 67.0 | 75 | KM409-63 | 1 | M75×1.5 | 15 | 40 | 85.0 | 95.0 |


**Prysmian Cables & Systems Limited**, Components Unit, Oak Road, Wrexham Industrial Estate, Wrexham, LL13 9HP, UK
**Commercial Enquiries**, Tel +44 (0) 845 767 8345, Fax: +44 (0) 23 8029 5465
**www.prysmian.co.uk**