# E****F* / D****F Cable Glands for armoured cable – ASSEMBLY INSTRUCTIONS

**Brief Description**
The Peppers E****F* type cable gland is for outdoor use in the appropriate Hazardous Areas with armoured cable. They give environmental protection to IP66/67/68 (50 metres for 7 days). The type IE option has an earth stud on the entry body. D****F type glands are for indoor use and offer the same level of environmental protection. A termination suitable for EMC protection can be made using armoured cables with these glands. Clamp options allow wire armour, braid and steel tape armours. A variant giving electrical continuity to a lead sheath cable is available.

**Warning**
Please read these instructions carefully. These products should not be used in applications except as detailed here or in our datasheets, unless confirmed in writing by Peppers. Peppers take no responsibility for any damage, injury or other consequential loss caused where products are not installed or used according to these instructions. This leaflet is not intended to advise on the selection of product. Further guidance can be found in the standards listed overleaf or the prevailing code of practice.

## STEP-BY-STEP FITTING INSTRUCTIONS (Note: No Back Nut & Outer Sheath Seal in D****F glands)

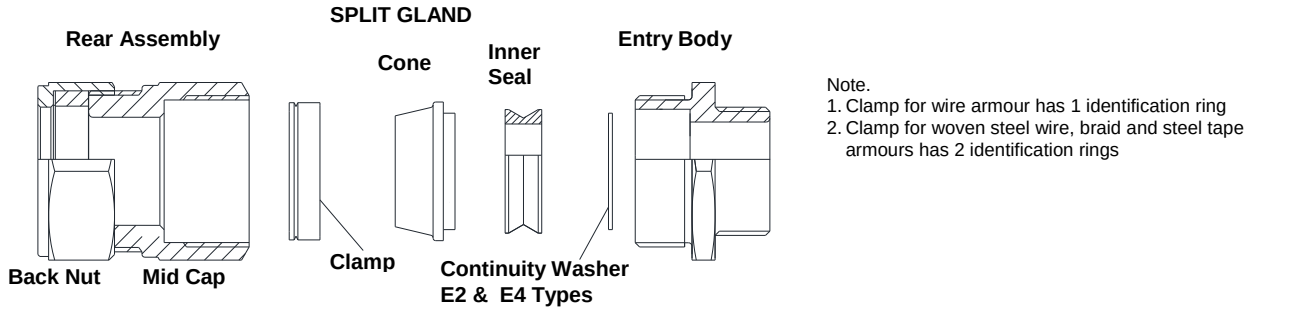


Note.
1. Clamp for wire armour has 1 identification ring
2. Clamp for woven steel wire, braid and steel tape armours has 2 identification rings

CABLE PREPARATION

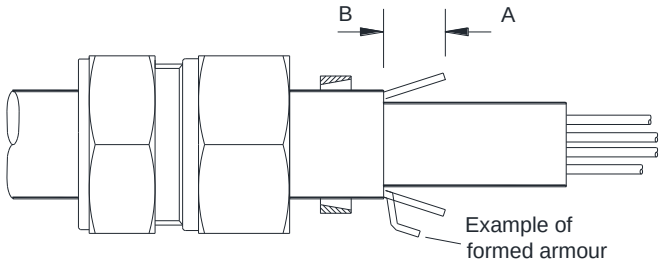


ARMOUR CLAMPING

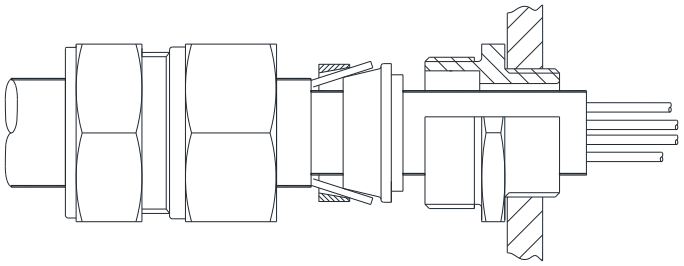

COMPLETED INSTALLATION

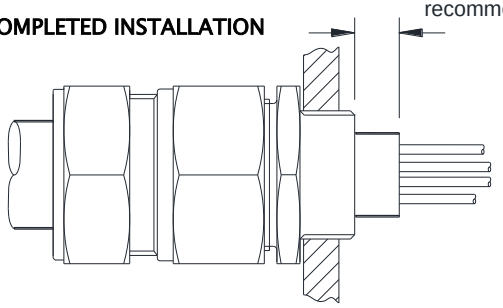


## STEP-BY-STEP FITTING INSTRUCTIONS

**1** Split gland as shown.
**2** Remove the Inner Seal. This must be removed to effectively clamp armour. E2 & E4 types: - remove Continuity Washer.
**3** Fit Entry Body, allowing for any installation accessories, and fully engage the thread into the equipment. Hand-tighten, then suitably secure with a wrench.
**4** Slide Rear Assembly (and shroud if required) onto cable as shown.
**5** Prepare cable as shown in diagram.
- **A** Strip the outer sheath and armour to suit the installation. For lead sheathed cable the lead sheath must pass through the Continuity Washer when installation is complete.
- **B** Expose armour approx. 20mm long and slide the Clamp over the exposed armour. Slide cone on to inner sheath and spread armour over the cone. Where sheath sizes are near minimum, form armour to facilitate clamping as shown. Ensure the Clamp is in the correct orientation. The clamp should be positioned so that the identification ring(s) are away from the cone.

**6** Insert cable through Entry Body. Do not re-fit seal or continuity washer. Push cable forward to maintain armour contact.
**7** Support the cable to prevent it from twisting. Hand tighten Mid Cap to Entry Body to lock onto armour. When tight, further tighten Mid Cap 1 full turn with wrench. Cable with maximum diameter wire armour may require an additional ½ to 1 turn.
**8** Loosen off Mid Cap to visually check armour is securely locked. If armour has not clamped repeat the clamping process.
**9** Pull out cable from Entry Body. Re-fit the inner seal (and continuity washer on E2 & E4 Types). Re-insert cable through the seal, (and continuity washer if fitted) and Entry Body. For lead sheath cable the Continuity Washer must be in contact with the lead sheath & must be in front of the seal.
**10** Re-tighten Mid Cap to the entry body. Ensure the seal makes full contact with cable inner sheath and then tighten the Mid Cap by the additional turns detailed in Table 1
**11** Hold Mid Cap with wrench and tighten Back Nut onto cable. Ensure the seal makes full contact with cable outer sheath and then tighten the back nut by the additional turns detailed in Table 1. If fitted, pull shroud over gland assembly.
**12** **(**E***IEF* / D***IEF options) For Integral Earth cable glands, connect the earth cable to the earth stud.

# Peppers Cable Glands Ltd. Stanhope Road Camberley GU15 3BT UK

## E****F* / D****F Cable Glands for armoured cable – ASSEMBLY INSTRUCTIONS

**Table 1 - Installation Data, Cable Sizes and Armour Acceptance (mm)**

| Cable Sizes (mm), Armour Acceptance (mm) & Assembly Data NOTE:- * Type 3 & 4 (silicone) seals only to 9.3 mm diameter | | | | | | | | | | |
|---|---|---|---|---|---|---|---|---|---|---|
| Gland Size | Mid Cap Turns – Step 10 | Back Nut Turns – Step 11 | Inner Sheath | | Outer Sheath | | Reduced Bore | | Armour Acceptance Ranges | |
| | | | Min | Max | Min | Max | Min | Max | Wire | Braid & Tape |
| **16** | 1 | 1 | 3.5 | 8.4 | 8.4 | 13.5 | 4.9 | 10.0 | 0.9 | 0.15 – 0.35 |
| **20S** | 1 | 1 | 8.0 | 11.7 | 11.5 | 16.0 | 9.4 | 12.5 | 0.9 – 1.25 | 0.15 – 0.35 |
| **20** | 1 | 1 | 6.7* | 14.0 | 15.5 | 21.1 | 12.0 | 17.6 | 0.9 – 1.25 | 0.15 – 0.50 |
| **25** | 1 | 1 | 13.0 | 20.0 | 20.3 | 27.4 | 16.8 | 23.9 | 1.25 – 1.6 | 0.15 – 0.50 |
| **32** | 1 | 2 | 19.0 | 26.3 | 26.7 | 34.0 | 23.2 | 30.5 | 1.6 – 2.0 | 0.15 – 0.55 |
| **40** | 1 | 1 | 25.0 | 32.2 | 33.0 | 40.6 | 28.6 | 36.2 | 1.6 – 2.0 | 0.2 – 0.6 |
| **50S** | 1 | 1 | 31.5 | 38.2 | 39.4 | 46.7 | 34.8 | 42.4 | 2.0 – 2.5 | 0.2 – 0.6 |
| **50H** | 1 | 2 | 31.5 | 38.2 | 45.7 | 53.2 | 34.8 | 42.4 | 2.0 – 2.5 | 0.2 – 0.6 |
| **50** | 1 | 2 | 36.5 | 44.1 | 45.7 | 53.2 | 41.1 | 48.5 | 2.0 – 2.5 | 0.3 – 0.8 |
| **63S** | 1 | 1 | 42.5 | 50.1 | 52.1 | 59.5 | 47.5 | 54.8 | 2.5 | 0.3 – 0.8 |
| **63H** | 1 | 1 | 42.5 | 50.1 | 58.4 | 65.8 | 47.5 | 54.8 | 2.5 | 0.3 – 0.8 |
| **63** | 1 | 1 | 49.5 | 56.0 | 58.4 | 65.8 | 53.8 | 61.2 | 2.5 | 0.3 – 0.8 |
| **75S** | 1 ¾ | 1 | 54.5 | 62.0 | 64.8 | 72.2 | 60.2 | 68.0 | 2.5 | 0.3 – 1.0 |
| **75H** | 1 ¾ | 1 | 54.5 | 62.0 | 71.1 | 78.0 | 66.5 | 73.4 | 2.5 | 0.3 – 1.0 |
| **75** | 1 ¾ | 1 | 60.5 | 68.0 | 71.1 | 78.0 | 66.5 | 73.4 | 2.5 | 0.3 – 1.0 |
| **80** | 1 ¼ | 1 | 62.2 | 72.0 | 77.0 | 84.0 | 71.9 | 79.4 | 3.15 | 0.45 – 1.0 |
| **80H** | 1 ¼ | 1 | 62.2 | 72.0 | 79.6 | 90.0 | 75.0 | 85.4 | 3.15 | 0.45 – 1.0 |
| **85** | 1 ¼ | 1 | 69.0 | 78.0 | 79.6 | 90.0 | 75.0 | 85.4 | 3.15 | 0.45 – 1.0 |
| **90** | 1 | 3 | 74.0 | 84.0 | 88.0 | 96.0 | 82.0 | 91.4 | 3.15 | 0.45 – 1.0 |
| **90H** | 1 | 1 | 74.0 | 84.0 | 92.0 | 102.0 | 87.4 | 97.4 | 3.15 | 0.45 – 1.0 |
| **100** | 1 | 1 | 82.0 | 90.0 | 92.0 | 102.0 | 87.4 | 97.4 | 3.15 | 0.45 – 1.0 |

**Approvals and Certification**

| Approval | Certificate Number | Protection Concept / Type |
|---|---|---|
| **ATEX (2014/34/EU)** | CML 19ATEX1106X | Ⓔx II 1D 2G Ex db IIC Gb / Ex eb IIC Gb / Ex ta IIIC Da |
| | CML 19ATEX4109X | Ⓔx II 3G Ex nR IIC Gc |
| **IECEx** | IECEx CML 19.0031X | Ex db IIC Gb / Ex eb IIC Gb / ExnR IIC Gc / Ex ta IIIC Da |
| **CSA - Canada** | 1356011 | Ex d IIC Gb / Ex e IIC Gb / CL I Div 2 Gr ABCD / CL II Gr EFG / CL III Type 4X |
| **CSA - US** | 2627370 | Class II, Division 1, Groups EFG / Class III; Type 4X<br>Class I Zone 1 AEx e IIC Gb / Class II, Zone 20 AEx ta IIIC Da IP66 IP68 |
| **INMETRO** | NCC 13.2186 X | Ex db IIC Gb / Ex eb IIC Gb / Ex nR IIC Gc / Ex ta IIIC Da |
| **EAC** | RU C-GB.BH02.B.00693/18 | 1Ex d IIC Gb X / 1Ex e IIC Gb X / 2Ex nR IIC Gc X / Ex ta IIIC Da X |
| **UKRAINE** | CЦ 18.0323 X | II 1D 2G 3G Ex db IIC Gb / Ex eb IIC Gb / Ex nR IIC Gc / Ex ta IIIC Da / |
| **NEPSI** | GYJ16.1400X | Ex d IIC / Ex e IIC |
| **CCoE / PESO** | P365300/2 & P365300/13 | Ex d IIC Gb (Zone 1) / Ex e IIC Gb (Zone 2) / Ex nR IIC Gc (Zone 2) |
| **ABS** | 20-LD1944057-PDA | Specified ABS Rules – See certificate |
| **Lloyd's Register** | 10/00056(E2) | Ex db IIC Gb / Ex eb IIC Gb / Ex nR IIC Gc / Ex ta IIIC Da |
| **Russian Maritime** | 19.00189.278 | Ex d IIC Gb / Ex e IIC Gb / Ex ta IIIC Da |

**Installation Guidance**

| Point | Advice | | | |
|---|---|---|---|---|
| 1 | EN/IEC 60079-10 | EN/IEC 60079-14 | National Electrical Code (NEC 500 – 505) | Canadian Electrical Code (CSA C22.1) |
| 2 | Installation should only be carried out by a competent electrician, skilled in cable gland installation. | | | |
| 3 | Comprehensive details of the compliance standards can be found in the product certificates which are available for download from our website. | | | |
| 4 | NO INSTALLATION SHOULD BE CARRIED OUT UNDER LIVE CONDITIONS. | | | |
| 5 | Threaded entries: the product can be installed directly into threaded entries. Threaded entries should comply with the relevant applicable standards and have a lead-in chamfer to allow for full engagement of the threads. Failure to provide a sufficient lead-in chamfer may lead to ingress sealing issues. For Ex db applications a minimum of 5 fully engaged parallel threads is required. Parallel entry threads will maintain an IP rating of IP64. A Peppers sealing washer should be used to maintain all IP ratings greater than IP64. Any thread sealant used should be non-hardening. Whilst Peppers products with tapered threads, when installed into a threaded entry, have been tested to maintain IP66 without any additional sealant, due to the differing gauging tolerances associated with the use of tapered threads it is recommended to use a non-hardening thread sealant if an IP rating higher than IP64 is required. | | | |
| 6 | Clearance holes: these shall be 0.5mm (+/-0.2mm) larger than the nominal diameter of the external entry thread. The product should be secured with a Peppers locknut and the threads tightened to ensure the cable gland is secure. A Peppers sealing washer should be used to maintain IP ratings. A Peppers serrated washer should be used for additional installation protection. | | | |
| 7 | To maintain the Ingress Protection rating of the product, the entry hole must be perpendicular to the surface of the enclosure. The surface should be sufficiently flat and rigid to support the assembly and make the IP joint. The product incorporates a thread run out according to general machining techniques and will not have a full form thread for the entire length and as such entry threads should have a suitable lead-in chamfer to ensure a seal is maintained. Further guidance can be found in Peppers document CT0012 which can be found on our website. It is the user's/installer's responsibility to ensure that the interface between the enclosure and cable gland is suitably sealed for the required application. | | | |
| 8 | Where a bonding connection to earth is required a Peppers earth tag should be used. Peppers earth tags have been independently tested to comply with the Category B values given in IEC 62444. Further guidance can be found in Peppers document CT0017 which can be found on our website. Peppers earth tags should be fitted over the external entry thread from either inside or outside the enclosure. If fitted internally they must be secured with a Peppers locknut and optionally a Peppers serrated washer. | | | |
| 9 | Peppers external metric entry threads comply with ISO 965-1 and ISO 965-3 with a 6g tolerance fit. Peppers standard metric thread pitch is 1.5mm for threads up to M75 and 2.0mm for size M80 and above. Alternative thread pitches are available upon request. Peppers external NPT threads are in accordance with ASME B1.20.1 with gauging to clause 8.1. All threads comply with the threaded joint requirements of clause 5.3 from IEC 60079-1. Information on other thread types can be found in the product certificates. | | | |
| 10 | Once installed do not dismantle except for routine inspection. An inspection should be conducted as per IEC/EN 60079-17. After inspection the gland should be re-assembled as instructed, ensuring the compression nut, mid cap and back nut are correctly tightened to ensure the cable is secure. | | | |
| 11 | If required an anti-seize lubricant may be used to aid assembly and routine inspection. The lubricant should comply with the prevailing code of practice and care should be taken to ensure no lubricant comes into contact with the cable gland seals as this may impair performance. | | | |

**Interpretation of Markings.** Markings on the gland carry the following meanings:

**Cable Gland Type & Size E-a-b-c-IE-F-R-ddd-eee-nn**

| | | | |
|---|---|---|---|
| a = | Seal Type 1 = Neoprene (black) 2 = Neoprene with Continuity washer 3 = Silicone (white) 4 = Silicone with Continuity Washer | R = | Optional reduced bore outer seal (red silicone) |
| b = | Armour clamping **W** = single wire armour **X** = woven steel wire/tape/braid | ddd = | Gland size |
| c = | Main component material **A** = Aluminium **B** = brass **S** = stainless steel | eee = | Entry thread type and size |
| IE = | Integral Earth stud option | nn = | Year of manufacture |

**Specific Conditions of Use**

1. These glands must not be used with enclosures where the temperature at the point of contact exceeds -35°C to +90°C using neoprene seals or -60°C to +180°C using silicone seals.
2. These glands, when installed in accordance with the manufacturer's instructions and with an appropriate enclosure on which they are fixed, are capable of providing an ingress protection of IP66 and IP68 (50 metres 7 days)
3. If these cable glands only grip the cable sheath of the cable and do not clamp the cable armour or if they are used to terminate unarmoured, braided or screened cables, then they shall only be used for fixed installations, hence the cables shall be effectively clamped to prevent pulling or twisting.
4. The threaded entry component threads without interface o-ring seals installed in an explosive dust atmosphere, within threaded entries, shall only be fitted into enclosures that have either:
   - parallel entries that will ensure that a minimum of 5 full threads of contact will be maintained, this is in accordance with clause 5.1.2 of EN 60079-31:2014 / IEC 60079-31: 2013,
   - tapered entries that will ensure that a minimum of 3 ½ full threads of contact will be maintained, this is in accordance with clause 5.1.2 of EN 60079-31:2014 / IEC 60079-31: 2013