Float switch
For horizontal installation, miniature design
Model HLS-M

Applications

- Level monitoring and level indication of liquids
- Level detection for almost all liquid media
- Pump and level control
- Alarm signals
- Dry-run and overflow protection

Special features

- Lateral installation in the tank
- Operating limits:
  - Operating temperature: T = -40 ... +120 °C
  - Operating pressure: P = 5 bar
  - Limit density: ρ ≥ 800 kg/m³
- Plastic and stainless steel versions
- Space-saving installation
- Switch consists of only one component



Fig. top: Plastic version, model HLS-M11
Fig. bottom: Stainless steel version, model HLS-M22

Description

With its compact design, the model HLS-M float switch for horizontal installation in miniature design is ideally suited for use in small tanks, for indicating minimum/maximum levels.

The float is attached to a supported, swivelling lever and moves with the level of the medium being measured. By means of a permanent magnet, when a preset switch point is reached, a reed contact (inert gas contact) is actuated.

By using a magnet and reed contact the switching operation is non-contact, free from wear and needs no power supply. The contacts are potential-free.

The switching function refers to a rising liquid level: Standard use as normally open contact (can be used as normally closed contact by a 180° rotation).

The float switch is simple to mount and maintenance-free, so the costs of mounting, commissioning and operation are low.

Data sheets showing similar products:
Float switch, for the process industry; model FLS; see data sheet LM 30.01
Float switch, for the process industry; horizontal installation; model HLS; see data sheet LM 30.02

WIKA
Part of your business

Model overview

Float switch model	Description	Installation	Electrical connection
HLS-M11	Plastic version	From inside	Cable
HLS-M12	Plastic version	From outside	Cable
HLS-M21	Stainless steel version	From inside	Cable
HLS-M22	Stainless steel version	From outside	Cable
HSL-M23	Stainless steel version	From outside	Connector

Approvals

Logo	Description	Country
CE	**EU declaration of conformity** RoHS directive	European Union

Plastic version, for installation from inside, cable outlet
Model HLS-M11

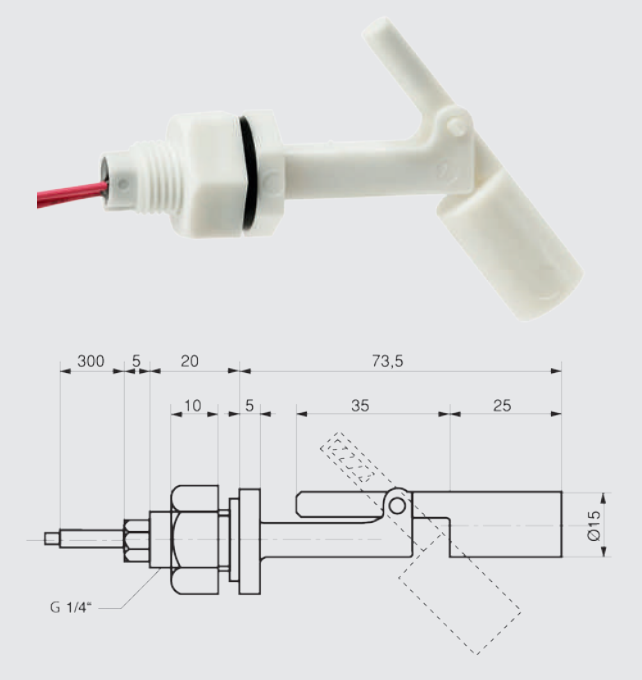

Specifications	
Switching power Normally open contact (can be used as normally closed contact by a 180° rotation)	< AC 25 V; 25 VA; 0.5 A < DC 60 V; 25 W; 0.5 A **Attention:** Operation only at safety extra-low voltage, e.g. with contact protection relay
Mounting position	Horizontal
Limit density	≥ 800 kg/m³
Medium temperature	-10 … +80 °C
Ingress protection	IP65
Max. operating pressure	1 bar
Material	Polypropylene
Process connection	Male thread G 1/4"
Mounting	For installation in the tank from inside
Float	Outer diameter 15 mm Length 25 mm
Electrical connection	Cable connection PVC stranded wires, 2 x 0.5 mm² Cable length 0.3 m
Order number	117612

Plastic version, for installation from outside, cable outlet
Model HLS-M12

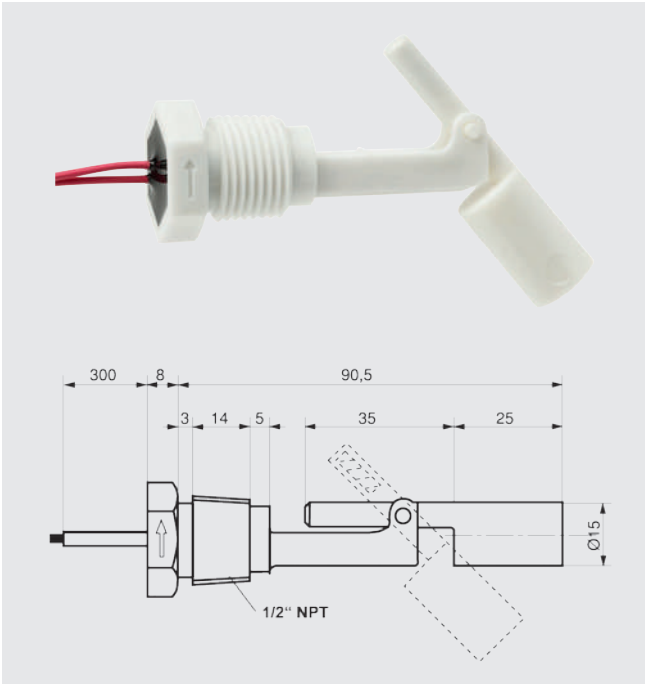

Specifications	
Switching power Normally open contact (can be used as normally closed contact by a 180° rotation)	< AC 25 V; 25 VA; 0.5 A < DC 60 V; 25 W; 0.5 A **Attention:** Operation only at safety extra-low voltage, e.g. with contact protection relay
Mounting position	Horizontal
Limit density	≥ 800 kg/m³
Medium temperature	-10 … +80 °C
Ingress protection	IP65
Max. operating pressure	1 bar
Material	Polypropylene
Process connection	Male thread 1/2" NPT
Mounting	For installation in the tank from outside
Float	Outer diameter 15 mm Length 25 mm
Electrical connection	Cable connection PVC stranded wires, 2 x 0.5 mm² Cable length 0.3 m
Order number	118329

Stainless steel version, for installation from inside, cable outlet
Model HLS-M21

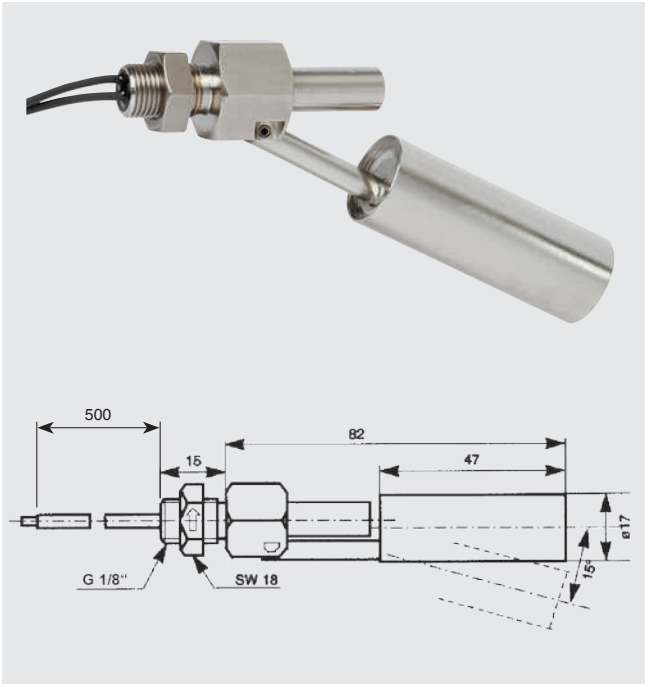

Specifications	
Switching power Normally open contact (can be used as normally closed contact by a 180° rotation)	< AC 50 V; 25 VA; 0.5 A < DC 75 V; 25 W; 0.5 A **Attention:** Operation only at safety extra-low voltage, e.g. with contact protection relay
Mounting position	Horizontal
Limit density	≥ 800 kg/m³
Medium temperature	-40 … +120 °C
Ingress protection	IP65
Max. operating pressure	5 bar
Material	Stainless steel 1.4301
Process connection	Male thread G 1/8"
Mounting	For installation in the tank from inside
Float	Outer diameter 17 mm Length 47 mm
Electrical connection	Cable connection PVC stranded wires, 2 x 0.5 mm² Cable length 0.5 m
Order number	118330

Stainless steel version, for installation from outside, cable outlet
Model HLS-M22

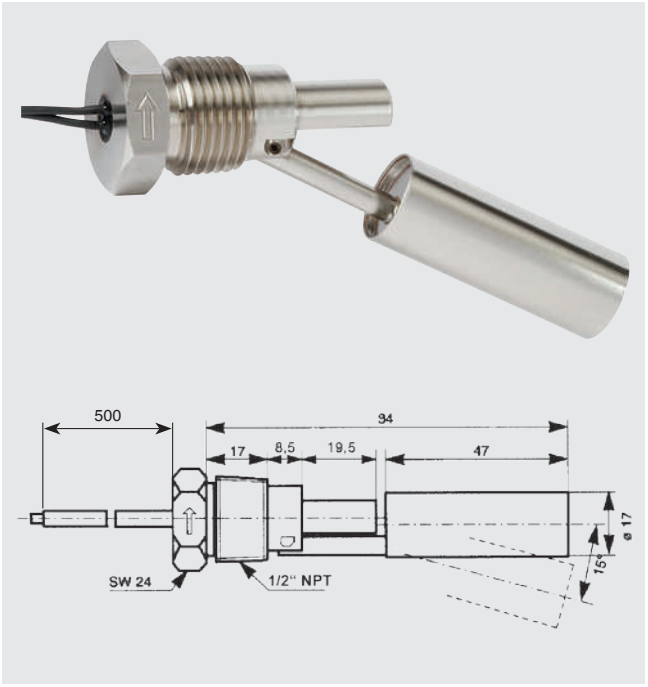

Specifications	
Switching power Normally open contact (can be used as normally closed contact by a 180° rotation)	< AC 50 V; 25 VA; 0.5 A < DC 75 V; 25 W; 0.5 A **Attention:** Operation only at safety extra-low voltage, e.g. with contact protection relay
Mounting position	Horizontal
Limit density	≥ 800 kg/m³
Medium temperature	-40 … +120 °C
Ingress protection	IP65
Max. operating pressure	5 bar
Material	Stainless steel 1.4301
Process connection	Male thread 1/2" NPT
Mounting	For installation in the tank from outside
Float	Outer diameter 17 mm Length 47 mm
Electrical connection	Cable connection PVC stranded wires, 2 x 0.5 mm² Cable length 0.5 m
Order number	013955

Special version HLS-M22H for temperature range -40 ... +180 °C on request

Stainless steel version, for installation from outside, plug connection
Model HLS-M23

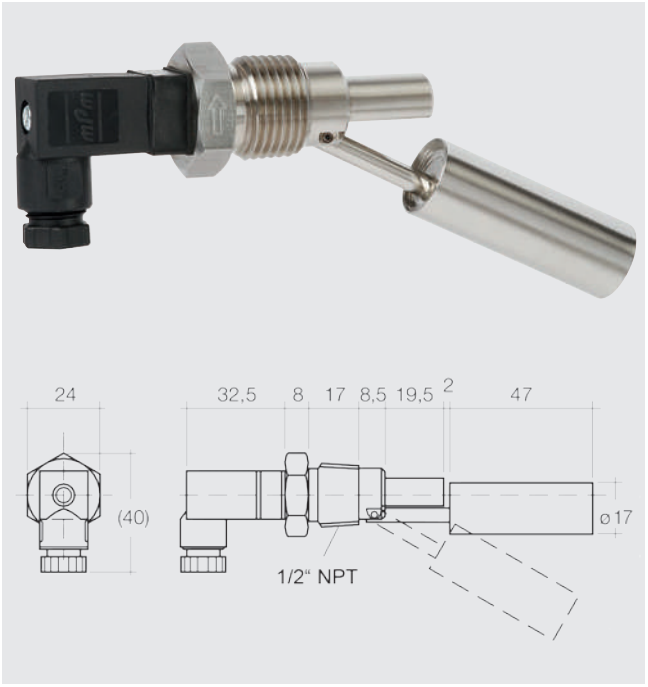

Specifications	
Switching power Normally open contact (can be used as normally closed contact by a 180° rotation)	< AC 50 V; 25 VA; 0.5 A < DC 75 V; 25 W; 0.5 A **Attention:** Operation only at safety extra-low voltage, e.g. with contact protection relay
Mounting position	Horizontal
Limit density	≥ 800 kg/m³
Medium temperature	-40 … +120 °C
Ingress protection	IP65
Max. operating pressure	5 bar
Material	Stainless steel 1.4301
Process connection	Male thread 1/2" NPT
Mounting	For installation in the tank from outside
Float	Outer diameter 17 mm Length 47 mm
Electrical connection	Plug connection Rectangular connector per EN 175301-803, 2-pin
Order number	118332

Ordering information
To order the described product the order number is sufficient.

Alternatively:
Model / Material / Process connection / Electrical connection / Cable length / Mounting / Pressure, temperature, density / Options

© 08/2014 WIKA Alexander Wiegand SE & Co. KG, all rights reserved.
The specifications given in this document represent the state of engineering at the time of publishing.
We reserve the right to make modifications to the specifications and materials.

WIKA Alexander Wiegand SE & Co. KG
Alexander-Wiegand-Straße 30
63911 Klingenberg/Germany
Tel. +49 9372 132-0
Fax +49 9372 132-406
info@wika.de
www.wika.com