

HI-GRIP WORM DRIVE HOSE CLIPS

Trusted throughout the world for their strength, durability and reliability.

- ✓ NATO approved
- ✓ Manufactured to exceed BS5315
- ✓ Exceeds all operational requirements of relevant DIN and SAE standards

EST 1768

JCS

HIGH PERFORMANCE HOSE CLIPS

HI-GRIP®

GENERAL PURPOSE HOSE CLIPS



Hi-Grip general purpose worm drive hose clips are widely regarded for their quality, durability and ability to withstand a great deal of abuse. They are manufactured to exceed BS5315, which has the highest requirements of any of the international standards and tests sealing ability, clamping force and torque. Also has BSI Kitemark and NATO approval, and exceeds all operational requirements of the relevant DIN and SAE standards.

ZINC PLATED

Used for a wide variety of domestic, automotive and industrial applications, the standard Hi-Grip hose clip is made from mild steel, electroplated, passivated and tested to EN9227.

304 STAINLESS STEEL (A2)

Hi-Grip stainless steel worm drive hose clips have become the industry standard for demanding applications throughout the world due to their exceptional quality and performance.

Made entirely from 18/8 marine quality stainless steel and with **Lloyds Register Approval**, they are ideal for salt water and other corrosive environments.

316 STAINLESS STEEL (A4)

Principally aimed at the marine, food, petro-chemical and pharmaceutical industries, the Hi-Grip 316 hose clip is made entirely from BS316 EN 1.4401/1.4578 austenitic stainless steel, providing the the same superior performance as the rest of the Hi-Grip range but with maximum corrosion resistance.

Lloyd's Register Type Approved for marine, offshore and industrial use.

TECHNICAL & MATERIAL SPECIFICATION

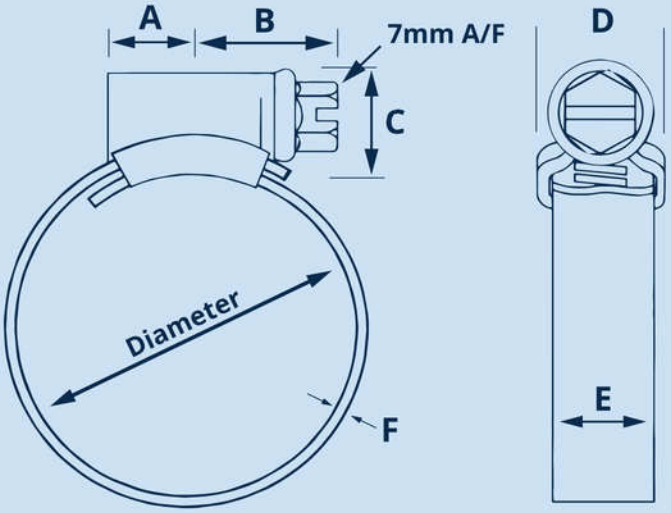

Size	A	B	C	D	E	F	Recommended Torque Setting NM	Recommended Torque Setting lb-in
12-20	7	14	10	12	9	0.7	3.0	26
22-45	8	15	12	15	13	0.9	5.0	45
50+	13	20	12	16	13	0.9	6.0	54

Dimensions in mm

96 HOURS NEUTRAL SALT SPRAY

NATO APPROVED

MADE IN BRITAIN

BS 5315

HI-GRIP
All parts - mild steel, bright zinc plated and passivated.

HI-GRIP STAINLESS 304
All parts BS304 - EN 1.4301/1.4576

HI-GRIP STAINLESS 316
All parts BS316 - EN 1.4401/1.4578

HI-GRIP® ZINC

HI-GRIP ZINC - RETAIL PACK

JCS Part No	Product Description	Packaging Description	Pack Qty
HGZ12RP	Hi-Grip, zinc plated hose clip, adjustment range 9.5-12mm	Retail pack (10 clips per carton)	100
HGZ16RP	Hi-Grip, zinc plated hose clip, adjustment range 11-16mm	Retail pack (10 clips per carton)	100
HGZ20RP	Hi-Grip, zinc plated hose clip, adjustment range 13-20mm	Retail pack (10 clips per carton)	100
HGZ22RP	Hi-Grip, zinc plated hose clip, adjustment range 14-22mm	Retail pack (10 clips per carton)	100
HGZ25RP	Hi-Grip, zinc plated hose clip, adjustment range 17-25mm	Retail pack (10 clips per carton)	100
HGZ30RP	Hi-Grip, zinc plated hose clip, adjustment range 22-30mm	Retail pack (10 clips per carton)	100
HGZ35RP	Hi-Grip, zinc plated hose clip, adjustment range 25-35mm	Retail pack (10 clips per carton)	100
HGZ40RP	Hi-Grip, zinc plated hose clip, adjustment range 30-40mm	Retail pack (10 clips per carton)	100
HGZ45RP	Hi-Grip, zinc plated hose clip, adjustment range 35-45mm	Retail pack (10 clips per carton)	100
HGZ50RP	Hi-Grip, zinc plated hose clip, adjustment range 35-50mm	Retail pack (10 clips per carton)	100
HGZ55RP	Hi-Grip, zinc plated hose clip, adjustment range 40-55mm	Retail pack (10 clips per carton)	100
HGZ60RP	Hi-Grip, zinc plated hose clip, adjustment range 45-60mm	Retail pack (10 clips per carton)	100
HGZ70RP	Hi-Grip, zinc plated hose clip, adjustment range 50-70mm	Retail pack (10 clips per carton)	100

HI-GRIP ZINC - BAG PACK

JCS Part No	Product Description	Packaging Description	Pack Qty
HGZ12BG	Hi-Grip, zinc plated hose clip, adjustment range 9.5-12mm	Bag pack (50 clips per bag)	50
HGZ16BG	Hi-Grip, zinc plated hose clip, adjustment range 11-16mm	Bag pack (50 clips per bag)	50
HGZ20BG	Hi-Grip, zinc plated hose clip, adjustment range 13-20mm	Bag pack (50 clips per bag)	50
HGZ22BG	Hi-Grip, zinc plated hose clip, adjustment range 14-22mm	Bag pack (50 clips per bag)	50
HGZ25BG	Hi-Grip, zinc plated hose clip, adjustment range 17-25mm	Bag pack (50 clips per bag)	50
HGZ30BG	Hi-Grip, zinc plated hose clip, adjustment range 22-30mm	Bag pack (50 clips per bag)	50
HGZ35BG	Hi-Grip, zinc plated hose clip, adjustment range 25-35mm	Bag pack (50 clips per bag)	50
HGZ40BG	Hi-Grip, zinc plated hose clip, adjustment range 30-40mm	Bag pack (50 clips per bag)	50
HGZ45BG	Hi-Grip, zinc plated hose clip, adjustment range 35-45mm	Bag pack (50 clips per bag)	50
HGZ50BG	Hi-Grip, zinc plated hose clip, adjustment range 35-50mm	Bag pack (25 clips per bag)	25
HGZ55BG	Hi-Grip, zinc plated hose clip, adjustment range 40-55mm	Bag pack (25 clips per bag)	25
HGZ60BG	Hi-Grip, zinc plated hose clip, adjustment range 45-60mm	Bag pack (25 clips per bag)	25
HGZ70BG	Hi-Grip, zinc plated hose clip, adjustment range 50-70mm	Bag pack (25 clips per bag)	25
HGZ80BG	Hi-Grip, zinc plated hose clip, adjustment range 60-80mm	Bag pack (10 clips per bag)	10
HGZ90BG	Hi-Grip, zinc plated hose clip, adjustment range 70-90mm	Bag pack (10 clips per bag)	10
HGZ100BG	Hi-Grip, zinc plated hose clip, adjustment range 80-100mm	Bag pack (10 clips per bag)	10
HGZ120BG	Hi-Grip, zinc plated hose clip, adjustment range 90-120mm	Bag pack (10 clips per bag)	10
HGZ140BG	Hi-Grip, zinc plated hose clip, adjustment range 110-140mm	Bag pack (10 clips per bag)	10
HGZ160BG	Hi-Grip, zinc plated hose clip, adjustment range 130-160mm	Bag pack (10 clips per bag)	10

HI-GRIP® ZINC

HI-GRIP ZINC - BULK PACK

JCS Part No	Product Description	Packaging Description	Pack Qty
HGZ12BP	Hi-Grip, zinc plated hose clip, adjustment range 9.5-12mm	Bulk pack (600 clips per carton)	600
HGZ16BP	Hi-Grip, zinc plated hose clip, adjustment range 11-16mm	Bulk pack (500 clips per carton)	500
HGZ20BP	Hi-Grip, zinc plated hose clip, adjustment range 13-20mm	Bulk pack (400 clips per carton)	400
HGZ22BP	Hi-Grip, zinc plated hose clip, adjustment range 14-22mm	Bulk pack (500 clips per carton)	500
HGZ25BP	Hi-Grip, zinc plated hose clip, adjustment range 17-25mm	Bulk pack (500 clips per carton)	500
HGZ30BP	Hi-Grip, zinc plated hose clip, adjustment range 22-30mm	Bulk pack (400 clips per carton)	400
HGZ35BP	Hi-Grip, zinc plated hose clip, adjustment range 25-35mm	Bulk pack (600 clips per carton)	600
HGZ40BP	Hi-Grip, zinc plated hose clip, adjustment range 30-40mm	Bulk pack (500 clips per carton)	500
HGZ45BP	Hi-Grip, zinc plated hose clip, adjustment range 35-45mm	Bulk pack (400 clips per carton)	400
HGZ50BP	Hi-Grip, zinc plated hose clip, adjustment range 35-50mm	Bulk pack (350 clips per carton)	350
HGZ55BP	Hi-Grip, zinc plated hose clip, adjustment range 40-55mm	Bulk pack (300 clips per carton)	300
HGZ60BP	Hi-Grip, zinc plated hose clip, adjustment range 45-60mm	Bulk pack (250 clips per carton)	250
HGZ70BP	Hi-Grip, zinc plated hose clip, adjustment range 50-70mm	Bulk pack (200 clips per carton)	200
HGZ80BP	Hi-Grip, zinc plated hose clip, adjustment range 60-80mm	Bulk pack (150 clips per carton)	150
HGZ90BP	Hi-Grip, zinc plated hose clip, adjustment range 70-90mm	Bulk pack (100 clips per carton)	100
HGZ100BP	Hi-Grip, zinc plated hose clip, adjustment range 80-100mm	Bulk pack (100 clips per carton)	100
HGZ120BP	Hi-Grip, zinc plated hose clip, adjustment range 90-120mm	Bulk pack (75 clips per carton)	75
HGZ140BP	Hi-Grip, zinc plated hose clip, adjustment range 110-140mm	Bulk pack (75 clips per carton)	75
HGZ160BP	Hi-Grip, zinc plated hose clip, adjustment range 130-160mm	Bulk pack (75 clips per carton)	75
HGZ180BP	Hi-Grip, zinc plated hose clip, adjustment range 150-180mm	Bulk pack (75 clips per carton)	75
HGZ200BP	Hi-Grip, zinc plated hose clip, adjustment range 170-200mm	Bulk pack (75 clips per carton)	75
HGZ220BP	Hi-Grip, zinc plated hose clip, adjustment range 190-220mm	Bulk pack (75 clips per carton)	75
HGZ240BP	Hi-Grip, zinc plated hose clip, adjustment range 210-240mm	Bulk pack (75 clips per carton)	75
HGZ260BP	Hi-Grip, zinc plated hose clip, adjustment range 230-260mm	Bulk pack (75 clips per carton)	75
HGZ280BP	Hi-Grip, zinc plated hose clip, adjustment range 250-280mm	Bulk pack (50 clips per carton)	50
HGZ300BP	Hi-Grip, zinc plated hose clip, adjustment range 270-300mm	Bulk pack (50 clips per carton)	50
HGZ320BP	Hi-Grip, zinc plated hose clip, adjustment range 290-320mm	Bulk pack (50 clips per carton)	50
HGZ340BP	Hi-Grip, zinc plated hose clip, adjustment range 310-340mm	Bulk pack (50 clips per carton)	50
HGZ360BP	Hi-Grip, zinc plated hose clip, adjustment range 330-360mm	Bulk pack (50 clips per carton)	50
HGZ380BP	Hi-Grip, zinc plated hose clip, adjustment range 350-380mm	Bulk pack (50 clips per carton)	50
HGZ400BP	Hi-Grip, zinc plated hose clip, adjustment range 370-400mm	Bulk pack (50 clips per carton)	50
HGZ420BP	Hi-Grip, zinc plated hose clip, adjustment range 390-420mm	Bulk pack (50 clips per carton)	50
HGZ440BP	Hi-Grip, zinc plated hose clip, adjustment range 410-440mm	Bulk pack (50 clips per carton)	50
HGZ460BP	Hi-Grip, zinc plated hose clip, adjustment range 430-460mm	Bulk pack (50 clips per carton)	50
HGZ480BP	Hi-Grip, zinc plated hose clip, adjustment range 450-480mm	Bulk pack (50 clips per carton)	50
HGZ500BP	Hi-Grip, zinc plated hose clip, adjustment range 470-500mm	Bulk pack (50 clips per carton)	50

HI-GRIP® SS304

HI-GRIP SS304 - RETAIL PACK

JCS Part No	Product Description	Packaging Description	Pack Qty
HGS12RP	Hi-Grip, 304 stainless steel hose clip, adjustment range 9.5-12mm	Retail pack (10 clips per carton)	100
HGS16RP	Hi-Grip, 304 stainless steel hose clip, adjustment range 11-16mm	Retail pack (10 clips per carton)	100
HGS20RP	Hi-Grip, 304 stainless steel hose clip, adjustment range 13-20mm	Retail pack (10 clips per carton)	100
HGS22RP	Hi-Grip, 304 stainless steel hose clip, adjustment range 14-22mm	Retail pack (10 clips per carton)	100
HGS25RP	Hi-Grip, 304 stainless steel hose clip, adjustment range 17-25mm	Retail pack (10 clips per carton)	100
HGS30RP	Hi-Grip, 304 stainless steel hose clip, adjustment range 22-30mm	Retail pack (10 clips per carton)	100
HGS35RP	Hi-Grip, 304 stainless steel hose clip, adjustment range 25-35mm	Retail pack (10 clips per carton)	100
HGS40RP	Hi-Grip, 304 stainless steel hose clip, adjustment range 30-40mm	Retail pack (10 clips per carton)	100
HGS45RP	Hi-Grip, 304 stainless steel hose clip, adjustment range 35-45mm	Retail pack (10 clips per carton)	100
HGS50RP	Hi-Grip, 304 stainless steel hose clip, adjustment range 35-50mm	Retail pack (10 clips per carton)	100
HGS55RP	Hi-Grip, 304 stainless steel hose clip, adjustment range 40-55mm	Retail pack (10 clips per carton)	100
HGS60RP	Hi-Grip, 304 stainless steel hose clip, adjustment range 45-60mm	Retail pack (10 clips per carton)	100
HGS70RP	Hi-Grip, 304 stainless steel hose clip, adjustment range 50-70mm	Retail pack (10 clips per carton)	100

HI-GRIP SS304 - BAG PACK

JCS Part No	Product Description	Packaging Description	Pack Qty
HGS12BG	Hi-Grip, 304 stainless steel hose clip, adjustment range 9.5-12mm	Bag pack (50 clips per bag)	50
HGS16BG	Hi-Grip, 304 stainless steel hose clip, adjustment range 11-16mm	Bag pack (50 clips per bag)	50
HGS20BG	Hi-Grip, 304 stainless steel hose clip, adjustment range 13-20mm	Bag pack (50 clips per bag)	50
HGS22BG	Hi-Grip, 304 stainless steel hose clip, adjustment range 14-22mm	Bag pack (50 clips per bag)	50
HGS25BG	Hi-Grip, 304 stainless steel hose clip, adjustment range 17-25mm	Bag pack (50 clips per bag)	50
HGS30BG	Hi-Grip, 304 stainless steel hose clip, adjustment range 22-30mm	Bag pack (50 clips per bag)	50
HGS35BG	Hi-Grip, 304 stainless steel hose clip, adjustment range 25-35mm	Bag pack (50 clips per bag)	50
HGS40BG	Hi-Grip, 304 stainless steel hose clip, adjustment range 30-40mm	Bag pack (50 clips per bag)	50
HGS45BG	Hi-Grip, 304 stainless steel hose clip, adjustment range 35-45mm	Bag pack (50 clips per bag)	50
HGS50BG	Hi-Grip, 304 stainless steel hose clip, adjustment range 35-50mm	Bag pack (25 clips per bag)	25
HGS55BG	Hi-Grip, 304 stainless steel hose clip, adjustment range 40-55mm	Bag pack (25 clips per bag)	25
HGS60BG	Hi-Grip, 304 stainless steel hose clip, adjustment range 45-60mm	Bag pack (25 clips per bag)	25
HGS70BG	Hi-Grip, 304 stainless steel hose clip, adjustment range 50-70mm	Bag pack (25 clips per bag)	25
HGS80BG	Hi-Grip, 304 stainless steel hose clip, adjustment range 60-80mm	Bag pack (10 clips per bag)	10
HGS90BG	Hi-Grip, 304 stainless steel hose clip, adjustment range 70-90mm	Bag pack (10 clips per bag)	10
HGS100BG	Hi-Grip, 304 stainless steel hose clip, adjustment range 80-100mm	Bag pack (10 clips per bag)	10
HGS120BG	Hi-Grip, 304 stainless steel hose clip, adjustment range 90-120mm	Bag pack (10 clips per bag)	10
HGS140BG	Hi-Grip, 304 stainless steel hose clip, adjustment range 110-140mm	Bag pack (10 clips per bag)	10
HGS160BG	Hi-Grip, 304 stainless steel hose clip, adjustment range 130-160mm	Bag pack (10 clips per bag)	10

HI-GRIP® SS304

HI-GRIP SS304 - BULK PACK

JCS Part No	Product Description	Packaging Description	Pack Qty
HGS12BP	Hi-Grip, 304 stainless steel hose clip, adjustment range 9.5-12mm	Bulk pack (600 clips per carton)	600
HGS16BP	Hi-Grip, 304 stainless steel hose clip, adjustment range 11-16mm	Bulk pack (500 clips per carton)	500
HGS20BP	Hi-Grip, 304 stainless steel hose clip, adjustment range 13-20mm	Bulk pack (400 clips per carton)	400
HGS22BP	Hi-Grip, 304 stainless steel hose clip, adjustment range 14-22mm	Bulk pack (500 clips per carton)	500
HGS25BP	Hi-Grip, 304 stainless steel hose clip, adjustment range 17-25mm	Bulk pack (500 clips per carton)	500
HGS30BP	Hi-Grip, 304 stainless steel hose clip, adjustment range 22-30mm	Bulk pack (400 clips per carton)	400
HGS35BP	Hi-Grip, 304 stainless steel hose clip, adjustment range 25-35mm	Bulk pack (600 clips per carton)	600
HGS40BP	Hi-Grip, 304 stainless steel hose clip, adjustment range 30-40mm	Bulk pack (500 clips per carton)	500
HGS45BP	Hi-Grip, 304 stainless steel hose clip, adjustment range 35-45mm	Bulk pack (400 clips per carton)	400
HGS50BP	Hi-Grip, 304 stainless steel hose clip, adjustment range 35-50mm	Bulk pack (350 clips per carton)	350
HGS55BP	Hi-Grip, 304 stainless steel hose clip, adjustment range 40-55mm	Bulk pack (300 clips per carton)	300
HGS60BP	Hi-Grip, 304 stainless steel hose clip, adjustment range 45-60mm	Bulk pack (250 clips per carton)	250
HGS70BP	Hi-Grip, 304 stainless steel hose clip, adjustment range 50-70mm	Bulk pack (200 clips per carton)	200
HGS80BP	Hi-Grip, 304 stainless steel hose clip, adjustment range 60-80mm	Bulk pack (150 clips per carton)	150
HGS90BP	Hi-Grip, 304 stainless steel hose clip, adjustment range 70-90mm	Bulk pack (100 clips per carton)	100
HGS100BP	Hi-Grip, 304 stainless steel hose clip, adjustment range 80-100mm	Bulk pack (100 clips per carton)	100
HGS120BP	Hi-Grip, 304 stainless steel hose clip, adjustment range 90-120mm	Bulk pack (75 clips per carton)	75
HGS140BP	Hi-Grip, 304 stainless steel hose clip, adjustment range 110-140mm	Bulk pack (75 clips per carton)	75
HGS160BP	Hi-Grip, 304 stainless steel hose clip, adjustment range 130-160mm	Bulk pack (75 clips per carton)	75
HGS180BP	Hi-Grip, 304 stainless steel hose clip, adjustment range 150-180mm	Bulk pack (75 clips per carton)	75
HGS200BP	Hi-Grip, 304 stainless steel hose clip, adjustment range 170-200mm	Bulk pack (75 clips per carton)	75
HGS220BP	Hi-Grip, 304 stainless steel hose clip, adjustment range 190-220mm	Bulk pack (75 clips per carton)	75
HGS240BP	Hi-Grip, 304 stainless steel hose clip, adjustment range 210-240mm	Bulk pack (75 clips per carton)	75
HGS260BP	Hi-Grip, 304 stainless steel hose clip, adjustment range 230-260mm	Bulk pack (75 clips per carton)	75
HGS280BP	Hi-Grip, 304 stainless steel hose clip, adjustment range 250-280mm	Bulk pack (50 clips per carton)	50
HGS300BP	Hi-Grip, 304 stainless steel hose clip, adjustment range 270-300mm	Bulk pack (50 clips per carton)	50
HGS320BP	Hi-Grip, 304 stainless steel hose clip, adjustment range 290-320mm	Bulk pack (50 clips per carton)	50
HGS340BP	Hi-Grip, 304 stainless steel hose clip, adjustment range 310-340mm	Bulk pack (50 clips per carton)	50
HGS360BP	Hi-Grip, 304 stainless steel hose clip, adjustment range 330-360mm	Bulk pack (50 clips per carton)	50
HGS380BP	Hi-Grip, 304 stainless steel hose clip, adjustment range 350-380mm	Bulk pack (50 clips per carton)	50

HI-GRIP® SS316

HI-GRIP SS316 - RETAIL PACK

JCS Part No	Product Description	Packaging Description	Pack Qty
HGJ12RP	Hi-Grip, 316 stainless steel hose clip, adjustment range 9.5-12mm	Retail pack (10 clips per carton)	100
HGJ16RP	Hi-Grip, 316 stainless steel hose clip, adjustment range 11-16mm	Retail pack (10 clips per carton)	100
HGJ20RP	Hi-Grip, 316 stainless steel hose clip, adjustment range 13-20mm	Retail pack (10 clips per carton)	100
HGJ22RP	Hi-Grip, 316 stainless steel hose clip, adjustment range 14-22mm	Retail pack (10 clips per carton)	100
HGJ25RP	Hi-Grip, 316 stainless steel hose clip, adjustment range 17-25mm	Retail pack (10 clips per carton)	100
HGJ30RP	Hi-Grip, 316 stainless steel hose clip, adjustment range 22-30mm	Retail pack (10 clips per carton)	100
HGJ35RP	Hi-Grip,316 stainless steel hose clip, adjustment range 25-35mm	Retail pack (10 clips per carton)	100
HGJ40RP	Hi-Grip, 316 stainless steel hose clip, adjustment range 30-40mm	Retail pack (10 clips per carton)	100
HGJ45RP	Hi-Grip, 316 stainless steel hose clip, adjustment range 35-45mm	Retail pack (10 clips per carton)	100
HGJ50RP	Hi-Grip, 316 stainless steel hose clip, adjustment range 35-50mm	Retail pack (10 clips per carton)	100
HGJ55RP	Hi-Grip, 316 stainless steel hose clip, adjustment range 40-55mm	Retail pack (10 clips per carton)	100
HGJ60RP	Hi-Grip, 316 stainless steel hose clip, adjustment range 45-60mm	Retail pack (10 clips per carton)	100
HGJ70RP	Hi-Grip, 316 stainless steel hose clip, adjustment range 50-70mm	Retail pack (10 clips per carton)	100

HI-GRIP SS316 - BAG PACK

JCS Part No	Product Description	Packaging Description	Pack Qty
HGJ12BG	Hi-Grip, 316 stainless steel hose clip, adjustment range 9.5-12mm	Bag pack (50 clips per bag)	50
HGJ16BG	Hi-Grip, 316 stainless steel hose clip, adjustment range 11-16mm	Bag pack (50 clips per bag)	50
HGJ20BG	Hi-Grip, 316 stainless steel hose clip, adjustment range 13-20mm	Bag pack (50 clips per bag)	50
HGJ22BG	Hi-Grip, 316 stainless steel hose clip, adjustment range 14-22mm	Bag pack (50 clips per bag)	50
HGJ25BG	Hi-Grip, 316 stainless steel hose clip, adjustment range 17-25mm	Bag pack (50 clips per bag)	50
HGJ30BG	Hi-Grip, 316 stainless steel hose clip, adjustment range 22-30mm	Bag pack (50 clips per bag)	50
HGJ35BG	Hi-Grip,316 stainless steel hose clip, adjustment range 25-35mm	Bag pack (50 clips per bag)	50
HGJ40BG	Hi-Grip, 316 stainless steel hose clip, adjustment range 30-40mm	Bag pack (50 clips per bag)	50
HGJ45BG	Hi-Grip, 316 stainless steel hose clip, adjustment range 35-45mm	Bag pack (50 clips per bag)	50
HGJ50BG	Hi-Grip, 316 stainless steel hose clip, adjustment range 35-50mm	Bag pack (25 clips per bag)	25
HGJ55BG	Hi-Grip, 316 stainless steel hose clip, adjustment range 40-55mm	Bag pack (25 clips per bag)	25
HGJ60BG	Hi-Grip, 316 stainless steel hose clip, adjustment range 45-60mm	Bag pack (25 clips per bag)	25
HGJ70BG	Hi-Grip, 316 stainless steel hose clip, adjustment range 50-70mm	Bag pack (25 clips per bag)	25
HGJ80BG	Hi-Grip, 316 stainless steel hose clip, adjustment range 60-80mm	Bag pack (10 clips per bag)	10
HGJ90BG	Hi-Grip, 316 stainless steel hose clip, adjustment range 70-90mm	Bag pack (10 clips per bag)	10
HGJ100BG	Hi-Grip, 316 stainless steel hose clip, adjustment range 80-100mm	Bag pack (10 clips per bag)	10
HGJ120BG	Hi-Grip, 316 stainless steel hose clip, adjustment range 90-120mm	Bag pack (10 clips per bag)	10
HGJ140BG	Hi-Grip, 316 stainless steel hose clip, adjustment range 110-140mm	Bag pack (10 clips per bag)	10
HGJ160BG	Hi-Grip, 316 stainless steel hose clip, adjustment range 130-160mm	Bag pack (10 clips per bag)	10

HI-GRIP® SS316

HI-GRIP SS316 - BULK PACK

JCS Part No	Product Description	Packaging Description	Pack Qty
HGJ12BP	Hi-Grip, 316 stainless steel hose clip, adjustment range 9.5-12mm	Bulk pack (600 clips per carton)	600
HGJ16BP	Hi-Grip, 316 stainless steel hose clip, adjustment range 11-16mm	Bulk pack (500 clips per carton)	500
HGJ20BP	Hi-Grip, 316 stainless steel hose clip, adjustment range 13-20mm	Bulk pack (400 clips per carton)	400
HGJ22BP	Hi-Grip, 316 stainless steel hose clip, adjustment range 14-22mm	Bulk pack (500 clips per carton)	500
HGJ25BP	Hi-Grip, 316 stainless steel hose clip, adjustment range 17-25mm	Bulk pack (500 clips per carton)	500
HGJ30BP	Hi-Grip, 316 stainless steel hose clip, adjustment range 22-30mm	Bulk pack (400 clips per carton)	400
HGJ35BP	Hi-Grip,316 stainless steel hose clip, adjustment range 25-35mm	Bulk pack (600 clips per carton)	600
HGJ40BP	Hi-Grip, 316 stainless steel hose clip, adjustment range 30-40mm	Bulk pack (500 clips per carton)	500
HGJ45BP	Hi-Grip, 316 stainless steel hose clip, adjustment range 35-45mm	Bulk pack (400 clips per carton)	400
HGJ50BP	Hi-Grip, 316 stainless steel hose clip, adjustment range 35-50mm	Bulk pack (350 clips per carton)	350
HGJ55BP	Hi-Grip, 316 stainless steel hose clip, adjustment range 40-55mm	Bulk pack (300 clips per carton)	300
HGJ60BP	Hi-Grip, 316 stainless steel hose clip, adjustment range 45-60mm	Bulk pack (250 clips per carton)	250
HGJ70BP	Hi-Grip, 316 stainless steel hose clip, adjustment range 50-70mm	Bulk pack (200 clips per carton)	200
HGJ80BP	Hi-Grip, 316 stainless steel hose clip, adjustment range 60-80mm	Bulk pack (150 clips per carton)	150
HGJ90BP	Hi-Grip, 316 stainless steel hose clip, adjustment range 70-90mm	Bulk pack (100 clips per carton)	100
HGJ100BP	Hi-Grip, 316 stainless steel hose clip, adjustment range 80-100mm	Bulk pack (100 clips per carton)	100
HGJ120BP	Hi-Grip, 316 stainless steel hose clip, adjustment range 90-120mm	Bulk pack (75 clips per carton)	75
HGJ140BP	Hi-Grip, 316 stainless steel hose clip, adjustment range 110-140mm	Bulk pack (75 clips per carton)	75
HGJ160BP	Hi-Grip, 316 stainless steel hose clip, adjustment range 130-160mm	Bulk pack (75 clips per carton)	75
HGJ180BP	Hi-Grip, 316 stainless steel hose clip, adjustment range 150-180mm	Bulk pack (75 clips per carton)	75
HGJ200BP	Hi-Grip, 316 stainless steel hose clip, adjustment range 170-200mm	Bulk pack (75 clips per carton)	75
HGJ220BP	Hi-Grip, 316 stainless steel hose clip, adjustment range 190-220mm	Bulk pack (75 clips per carton)	75
HGJ240BP	Hi-Grip, 316 stainless steel hose clip, adjustment range 210-240mm	Bulk pack (75 clips per carton)	75
HGJ260BP	Hi-Grip, 316 stainless steel hose clip, adjustment range 230-260mm	Bulk pack (75 clips per carton)	75
HGJ280BP	Hi-Grip, 316 stainless steel hose clip, adjustment range 250-280mm	Bulk pack (50 clips per carton)	50
HGJ300BP	Hi-Grip, 316 stainless steel hose clip, adjustment range 270-300mm	Bulk pack (50 clips per carton)	50
HGJ320BP	Hi-Grip, 316 stainless steel hose clip, adjustment range 290-320mm	Bulk pack (50 clips per carton)	50
HGJ340BP	Hi-Grip, 316 stainless steel hose clip, adjustment range 310-340mm	Bulk pack (50 clips per carton)	50
HGJ360BP	Hi-Grip, 316 stainless steel hose clip, adjustment range 330-360mm	Bulk pack (50 clips per carton)	50
HGJ380BP	Hi-Grip, 316 stainless steel hose clip, adjustment range 350-380mm	Bulk pack (50 clips per carton)	50