98 Series - Handheld Small IoT Case

Product Overview

- Rounded design and compact plastic case ideal for use as IoT devices
- Easy to fit, yet secure and tool-less assembly, via snap together construction
- Despite the small size, ample internal space is achieved by the case's screwless construction
- PCB mounting pillars moulded into the base of the case, suitable for M2 screws
- Flat surfaces enable easy customisation for CNC milling and digital printing
- Ideal for small IoT appliances such as LoRaWAN or SIGFOX power-saving communication devices, RFID or GPS gadgets, or network sensors



SPECIFICATION	
Protection class	IP40
Operating temperature (Black)	-10°C to +60°C
Operating temperature (White)	-30°C to +60°C
Material (Black)	ABS UL94HB
Material (White)	Weather-resistant ASA UL94HB

Technical Data

PART NUMBER	EXTERNAL DIMENSIONS			INTERNAL DIMENSIONS			COLOUR
	L	W	H	L	W	H	
CHH9810BK	70	45	20	58.5	39.5	10.9	Black
CHH9810WH	70	45	20	58.5	39.5	10.9	White
CHH9820BK	70	45	30	58.1	39.1	20.9	Black
CHH9820WH	70	45	30	58.1	39.1	20.9	White
CHH9830BK	90	45	20	78.5	39.5	10.9	Black
CHH9830WH	90	45	20	78.5	39.5	10.9	White
CHH9840BK	90	45	30	78.1	39.1	20.9	Black
CHH9840WH	90	45	30	78.1	39.1	20.9	White

Technical Drawing

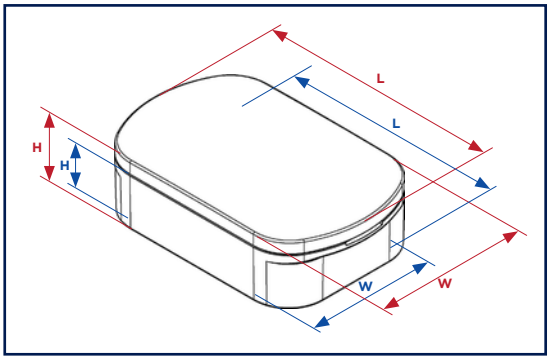

Standard Unit Includes

NO.	PART NAME	PIECES	MATERIAL	COLOUR / FINISH
1	Cover	1	ABS UL94HB	Black / Polished
			Weather-resistant ASA UL94HB	White / Polished
2	Base	1	ABS UL94HB	Black / Polished
			Weather-resistant ASA UL94HB	White / Polished

Note: Cover includes a protective film on the top face.

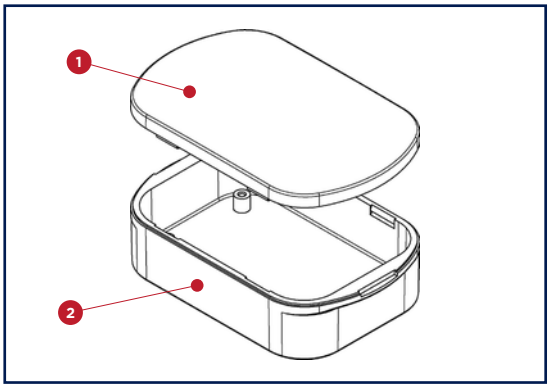

Applications and Industries

Potential uses for the enclosures are as follows: Small enclosure, Small handheld case, Remote controller enclosures, Key fob enclosure, IoT enclosure, SIGFOX device enclosure and much more.

Enclosures can be customised with CNC milling and digital printing to fit your branding and connectivity requirements.









We operate a constant improvement policy, our products are subject to change without notice.