Brand of NTN corporation

Technical data

UCFLE201

Bearing units



Grey cast housing, radial insert ball bearing with socket set screws,seal with slinger

KIT CONTENT

UC.201.G2, FLE204

VISUAL (S)

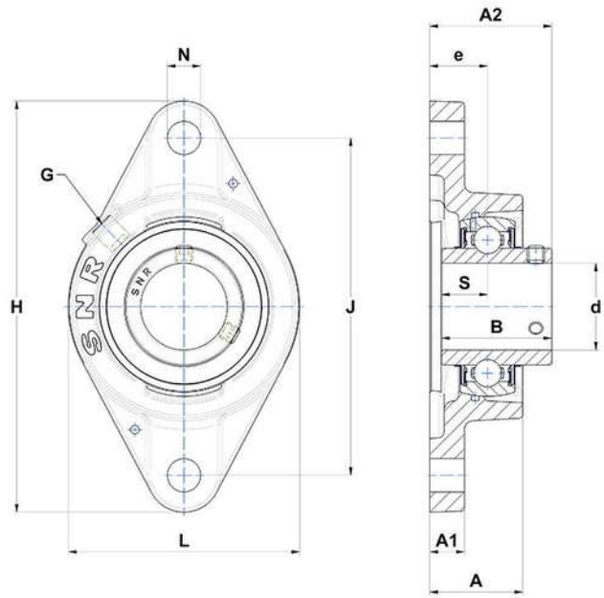

PRODUCT DEFINITION

Brand	SNR
A - Housing height	30,3 mm
A1 - Housing foot height / flange height	10 mm
A2 - Total height from mounting surface	37,3 mm
B - Width of Inner Ring	31 mm
d - Shaft diameter	12 mm

PRODUCT DEFINITION	
e - Distance mounting surface to bearing center	19 mm
G - Grease fitting	R1/8"
H - Housing length, width or diameter	112 mm
J - Mounting holes distance	90 mm
L - Housing width / diameter	61 mm
N - Mounting hole dimension	11,5 mm
S - Distance front side/bearing centre	12,7 mm

PRODUCT PERFORMANCE	
C - Dynamic load rating	12800000 mN
C0 - Static load rating	6650000 mN
Operating temperature min.	253,15 °K
Operating temperature max.	373,15 °K

OTHER FEATURES	
Mass	0,51 kg
Recommended tightening torque for set screw	5.5 N-m