# PSU 30205

Single Rail Panel Meter Power Supply

The PSU 30205 is a very compact, single rail 240V mains power supply unit designed primarily for the supply of digital panel meters. The linear regulator IC used features over-current and over-temperature protection and offers a 100mA @ +5V d.c. regulated output.

- **100mA @ +5V d.c. Regulated Output**
- **Very Compact Design**
- **Simple Screw-Terminal Connection**
- **Encapsulated Mains Transformer**
- **Use with Lascar Panel Meters**

| Standard Unit | | | Stock Number PSU 30205 | |
|---|---|---|---|---|
| **Specification** | **Min.** | **Typ.** | **Max.** | **Unit** |
| Load regulation | | | 1 | % |
| Line regulation | | | 1 | % |
| Ripple | | | 0.5 | mV |
| Operating temperature | 0 | | 70 | °C |
| Output Voltage | | 5 | | V d.c. |
| Output Current | | 100 | | mA |
| Input (50-60Hz) | 220 | 240 | 250 | V a.c. |

## SAFETY

For safe operation, the unit must be installed in an enclosure which prevents accidental contact with hazardous voltages, by providing appropriate insulation or guarding. If the enclosure is made of a conducting material or the internal surfaces have a conductive coating, ensure that no part of the power supply will come into contact with it, and maintain an air gap clearance of minimum 10mm. The mains lead to the unit must be fused with a 100mA fuse. In general, it is the responsibility of the user to ensure that the incorporation of the power supply unit into the OEM equipment conforms to the relevant sections of EN 60742, in accordance with the Low Voltage Directive (LVD 93/68/EEC).

**IF IN DOUBT CONTACT A LASCAR APPLICATIONS ENGINEER.**

## CONNECTIONS

The unit is supplied for operation with a 240V / 50Hz mains input. Follow the wiring diagram when using this power supply unit. Incorrect connection may damage the power supply unit.

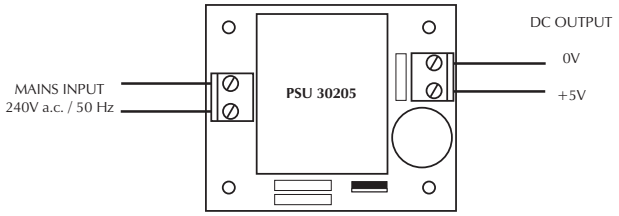


**IF IN DOUBT CONTACT A LASCAR APPLICATIONS ENGINEER.**

## DIMENSIONS All dimensions in mm (inches)

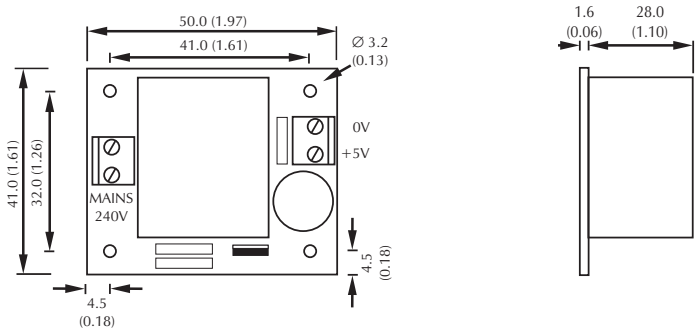




**LASCAR ELECTRONICS LTD.**
**MODULE HOUSE, WHITEPARISH,**
**WILTSHIRE. SP5 2SJ UK**
**TEL: ++44 (1794) 884567 FAX: ++44 (1794) 884616**

**LASCAR ELECTRONICS INC.**
**PO BOX 8204, SAVANNAH,**
**GA 31412 USA**
**TEL: ++1 (912) 234 2048 FAX: ++1 (912) 234 2049**

**WEBSITE: http://www.lascarelectronics.com/**