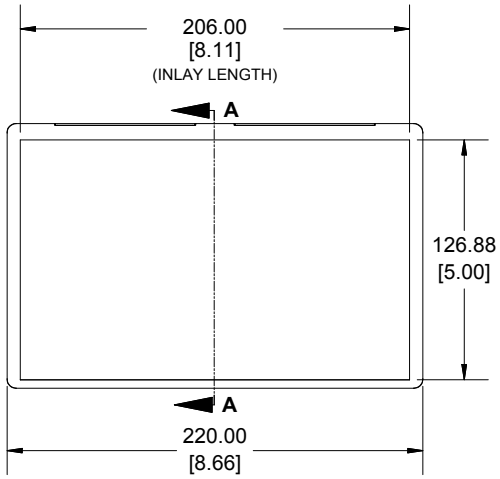

TOP VIEW

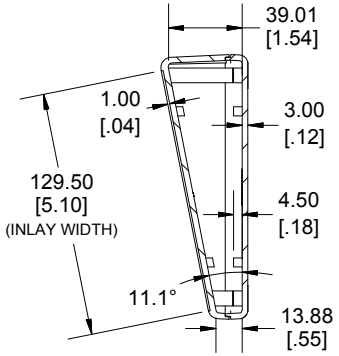

SECTION A-A
END VIEW

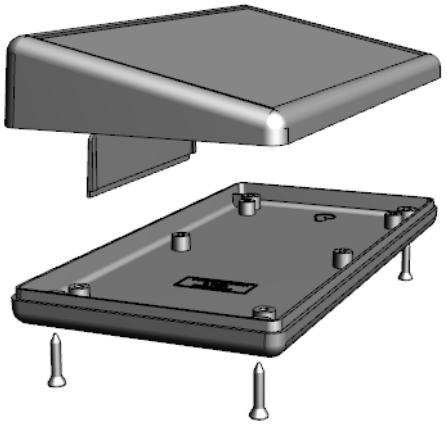

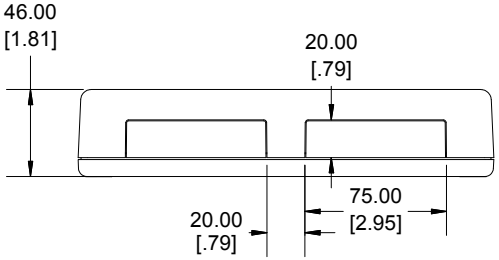

FRONT VIEW

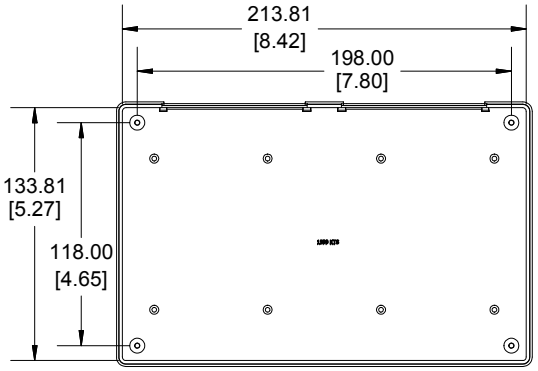

INSIDE LID

Enclosures can be Factory Modified (Milling, Drilling, Printing etc.)
Contact Factory mjm@hammondmfg.com for quotes
Solid models of this enclosure available in STEP or IGES.
(Part number and text placement/orientation on our products are subject to change, we do not recommend using them as a locating reference for modification purposes)

NOTE
Purchased assembly includes box, lid, 2 front panel and 4 cover screws. Box and Lid are made from General Purpose ABS
Recommended Torque: 42-57 ozf.in (30-40 cN.m)

PART NUMBERS	
1599KSTS General Purpose ABS	
Grey GP-ABS	1599KSTSGY
ACCESSORIES	
Cover Screws (Pkg 100) [#4 x 5/8" Self-tapping Screw]	1593MS100 (Grey)
P.C Board Screws (Pkg of 50 or 100) [#4 x 1/4" Pan Head Self Tapping Screws]	1593ATS50
	1593ATS100
Nylon Belt Clip	1599CLIP (Black)
	1599CLIPGY (Grey)

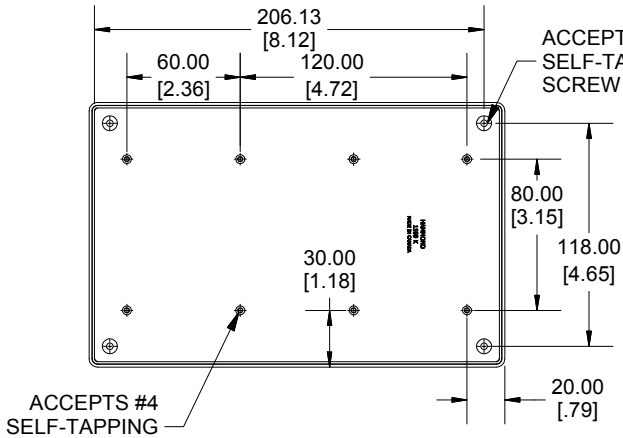

INSIDE BOX

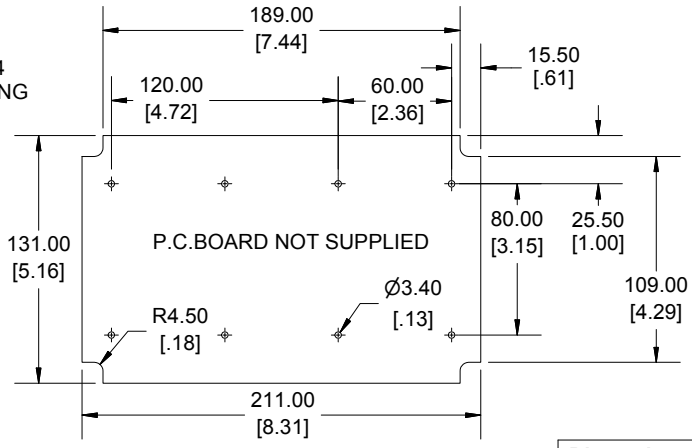

MAXIMUM P.C.BOARD

Dimensions:
mm
[inches]

HAMMOND MANUFACTURING®

1599KSTS

www.hammondmfg.com