Product data sheet
Characteristics

XUSL4E30H091LWH
Safety light curtain type 4, Telemecanique Safety light curtains XUSL, XUSL Hand IP69K with Heating, Long Sensing Range, Hp = 910 mm, R=30 mm

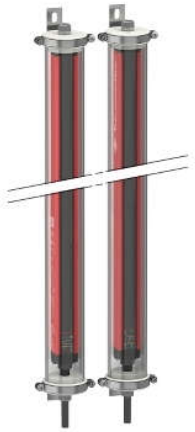

Main

Range of product	Telemecanique Safety light curtains XUSL
Product or component type	Safety light curtain type 4
Device short name	XUSL4E
Output type	2 safety outputs OSSD solid-state PNP (arc suppression)
Product specific application	For hand protection
[R] Resolution	30 mm
[Sn] nominal sensing distance	3…17 M by cabling 0…8 m by cabling
[Hp] Height protected	910 mm
Number of beams	46
Type of start / restart	Manual Automatic
External Device Monitoring (EDM)	Selected by wiring

Complementary

Detection system	Transmitter-receiver system
Response time	12.5 ms
Kit composition	Adjustable mounting bracket(s) 1 receiver(s) 1 transmitter(s) 1 user guide with certificate of conformity on CD-ROM Silicone o-ring(s) 1 PVC cable(s)
[EAA] effective aperture angle	2.5 ° at 3 m
Emission	IR LED 950 nm
[Us] rated supply voltage	24 V DC +/- 20 %
Supply	Power supply conforming to IEC 61496-1 Power supply conforming to IEC 60204-1
[Ie] rated operational current	2 A
Current consumption	42 mA no-load transmitter 83 mA no-load receiver 42 mA transmitter 900 mA with maximum load receiver
Output current limits	0.4 A for safety outputs OSSD
Output voltage	24 V
Output circuit type	DC
Maximum voltage drop	<0.5 V
Maximum Heating system power consumption	10 W
Local signalling	1 multi-colour LED transmitter 2 dual colour LEDs receiver
Electrical connection	1 male connector M12 5 pins transmitter 1 male connector M12 8 pins receiver
Type of cable	Unshielded cable AWG 22 10 m
Ohmic cable resistance (per m)	55.31 mOhm

The information provided in this documentation contains general descriptions and/or technical characteristics of the performance of the products contained herein.
This documentation is not intended as a substitute for and is not to be used for determining suitability or reliability of these products for specific user applications.
It is the duty of any such user or integrator to perform the appropriate and complete risk analysis, evaluation and testing of the products with respect to the relevant specific application or use thereof.
Neither Schneider Electric Industries SAS nor any of its affiliates or subsidiaries shall be responsible or liable for misuse of the information contained herein.

Function available	Test Muting through external safety module XPSLCMUT1160 LED display of operating modes and faults Anti-condensation system
Marking	CE
Material	PMMA (polymethyl methacrylate): tube Stainless steel AISI 316L: sealing plug PVC (polyvinyl chloride): cable
Housing colour	Red RAL 3000
Fixing mode	By fixing brackets
Net weight	5.55 kg
Offer type	Long distance
Provided equipment	With heating system

Environment

Directives	89/655/EEC - work equipment 89/336/EEC - electromagnetic compatibility 98/37/EEC - machinery
Product certifications	CULus TÜV Ecolab CE
Safety level (correctly wired)	Type 4 conforming to IEC 61496-1 SIL 3 conforming to IEC 61508 SILCL 3 conforming to IEC 62061 Category 4 conforming to EN/ISO 13849-1 PL = e conforming to EN/ISO 13849-1
Optical characteristic	Resistance to light disturbance conforming to EN/IEC 61496-2
Mission time	20 year(s)
Safety reliability data	PFHd = 1.30E-8 1/h conforming to IEC 61508
Ambient air temperature for operation	-30…55 °C -25…55 °C
Ambient air temperature for storage	-25…70 °C -30…70 °C
Relative humidity	0…95 % without condensation
IP degree of protection	IP69K
Shock resistance	10 gn for 16 ms conforming to IEC 61496-1
Vibration resistance	0.35 +/- 0.05 mm (f= 10…55 Hz) conforming to IEC 61496-1

Packing Units

Unit Type of Package 1	PCE
Number of Units in Package 1	1
Package 1 Weight	6.782 kg
Package 1 Height	13.5 cm
Package 1 Width	19.5 cm
Package 1 Length	100.0 cm

Offer Sustainability

Sustainable offer status	Green Premium product
REACh Regulation	REACh Declaration
REACh free of SVHC	Yes
EU RoHS Directive	Pro-active compliance (Product out of EU RoHS legal scope) EU RoHS Declaration
Toxic heavy metal free	Yes
Mercury free	Yes
RoHS exemption information	Yes
Environmental Disclosure	Product Environmental Profile
Circularity Profile	End Of Life Information

Contractual warranty

Warranty	18 mois

XUSL4E30H091LWH

Dimensions

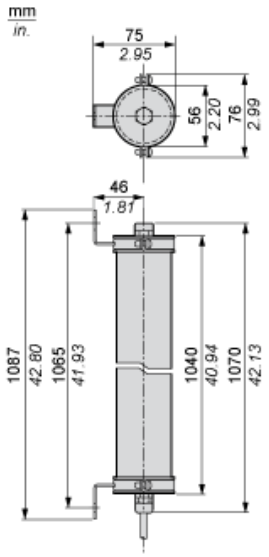

XUSL4E30H091LWH

Mounting and Clearance

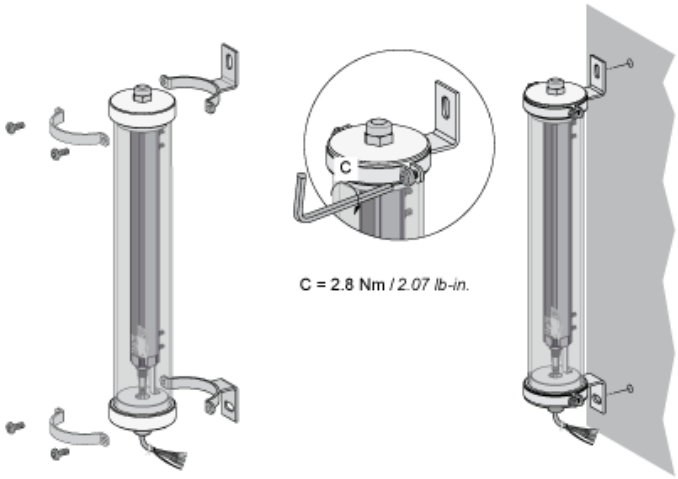

Wiring Diagrams

Transmitter Pre-wired

Brown: +24 Vdc
White: Configuration_0
Blue: 0 Vdc
Green or Black: Configuration_1
Grey: Functional Earth
Yellow: 0 Vdc (Heating system)
Red: +24 Vac/Vdc (Heating system)
Pink: Not connected

Receiver pre-wired

White: Output signal switching device 1
Brown: +24 Vdc
Green: Output signal switching device 2
Yellow: Configuration_A
Grey: K1_K2 Feedback/Restart
Pink: Configuration_B
Blue: 0 Vdc
Yellow/Green (or Red): Functional Earth
Black: 0 Vdc (Heating system)
Violet: 24 Vac/Vdc (Heating system)
For configuration_A and configuration_B,please refer to receiver configuration and operating modes

Receiver Configurations and Operating Modes

Automatic Start/Restart

Without External Device Monitoring (EDM) feedback loop

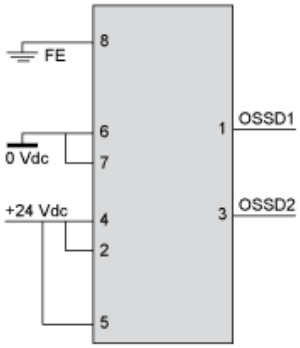

With External Device Monitoring (EDM) feedback loop

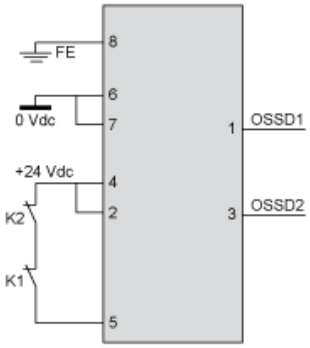

Manual Start/Restart

Without External Device Monitoring (EDM) feedback loop

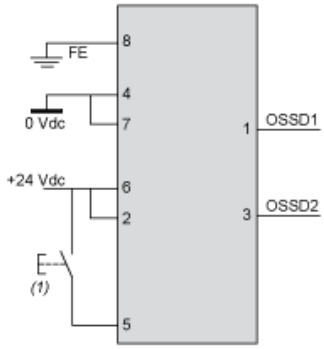

(1) Restart

With External Device Monitoring (EDM) feedback loop

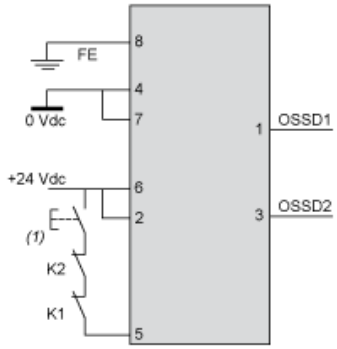

(1) Restart

Connecting to a Safety Interface

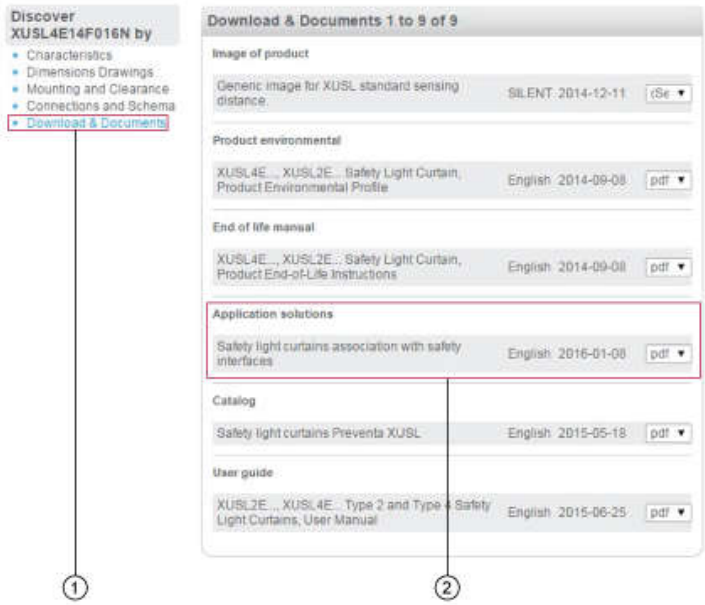

1 : Click on Download & Documents
2 : Click on Application solutions

To have all connection schematics concerning our safety module, select "download and document" and download the file "Safety light curtains association with safety interfaces"