PN3096
PN-2.5-RER14-MFRKG/US/ /V

Pressure sensors

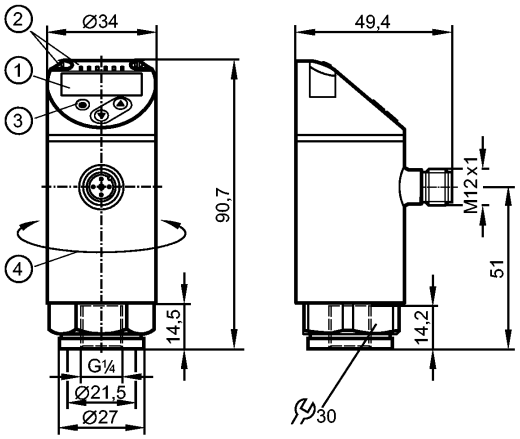

1: 4-digit alphanumeric display / alternating indication of red and green
2: LEDs (display unit / switching status)
3: Programming button
4: Upper part of the housing can be rotated by 345°

IO-Link

Product characteristics

Electronic pressure sensor
M12 connector
Function programmable
Measuring element: ceramic-capacitive pressure measuring cell
Process connection: G ¼ I / M6 I
2 outputs OUT1 = switching output OUT2 = analogue output
4-digit alphanumeric display / alternating indication of red and green
Measuring range: 0...2.5 bar / 0...36.2 psi / 0...250 kPa

Application

Application		Type of pressure: relative pressure Group 2 fluids according to the Pressure Equipment Directive (PED), group 1 fluids on request		
Pressure rating		20 bar	290 psi	2000 kPa
Bursting pressure min.		50 bar	725 psi	5000 kPa
Vacuum resistance	[mbar]	-1000		
Medium temperature	[°C]	-25...80		

Electrical data

Electrical design		DC PNP
Operating voltage	[V]	18...30 DC [1])
Current consumption	[mA]	< 35
Insulation resistance	[MΩ]	> 100 (500 V DC)
Protection class		III
Reverse polarity protection		yes

Outputs

Output		2 outputs OUT1 = switching output OUT2 = analogue output
Output function		normally open / closed programmable; 4...20 mA or 0...10 V
Current rating	[mA]	150; 200 (...60 °C); 250 (...40 °C)
Voltage drop	[V]	< 2.5
Short-circuit protection		pulsed
Overload protection		yes

PN3096 - Electronic pressure sensor - eclass: 27201302 / 27-20-13-02

Switching frequency	[Hz]	≤ 170		
Analogue output		4...20 mA; 0...10 V		
Max. load	[Ω]	4...20 mA: max. 500		
Min. load resistance	[Ω]	0...10 V: min. 2000		
Measuring / setting range				
Measuring range		0...2.5 bar	0...36.2 psi	0...250 kPa
Setting range				
Set point, SP		0.02...2.5 bar	0.4...36.2 psi	2...250 kPa
Reset point, rP		0.01...2.49 bar	0.2...36 psi	1...249 kPa
in steps of		0.01 bar	0.2 psi	1 kPa
Accuracy / deviations				
Accuracy / deviations (in % of the span)				
Switch point accuracy		< ± 0.5		
Characteristics deviation *)		< ± 0.25 (BFSL) / < ± 0.5 (LS)		
Hysteresis		< ± 0.25		
Repeatability **)		< ± 0.1		
Long-term stability ***)		< ± 0.05		
Temperature coefficients (TEMPCO) in the temperature range -25...80° C (in % of the span per 10 K)				
Greatest TEMPCO of the zero point		0.2		
Greatest TEMPCO of the span		0.2		
Reaction times				
Power-on delay time	[s]	0.3		
Min. response time switching output	[ms]	< 3		
Delay time programmable dS, dr	[s]	0...50		
Damping for the switching output (dAP)	[s]	0...4		
Damping for the analogue output (dAA)	[s]	0...4		
Response time analogue output	[ms]	< 3		
Integrated watchdog		yes		
Software / programming				
Programming options		hysteresis / window function; NO / NC; on delay, off delay; damping; display unit; current/ voltage output		
Interfaces				
IO-Link device				
Transfer type		COM2		
IO-Link revision		1.1		
SDCI standard		IEC 61131-9		
IO-Link device ID		432 d / 00 01 b0 h		
Profiles		Smart Sensor: Process Data Variable; Device Identification, Device Diagnosis		
SIO mode		yes		
Required master port class		A		
Process data analogue		1		
Process data binary		1		
Min. process cycle time	[ms]	2.3		
Environment				
Ambient temperature	[°C]	-25...80		
Storage temperature	[°C]	-40...100		
Protection		IP 65 / IP 67		
Tests / approvals				
Pressure equipment directive		Sound engineering practice		
EMC		DIN EN 61000-6-2 DIN EN 61000-6-3		
Shock resistance		DIN EN 60068-2-27	50 g (11 ms)	
Vibration resistance		DIN EN 60068-2-6	20 g (10...2000 Hz)	
MTTF	[Years]	181		

PN3096 - Electronic pressure sensor - eclass: 27201302 / 27-20-13-02

UL approval number		J004
Mechanical data		
Process connection		G ¼ I / M6 I
Materials (wetted parts)		stainless steel (316L / 1.4404); Al2O3 (ceramics); FKM
Housing materials		1.4404 (V4A / 316L); PBT+PC-GF 30; PBT-GF 20; PC
Min. pressure cycles		100 million
Tightening torque	[Nm]	25...35 (recommended tightening torque²)
Restrictor element integrated		no (can be retrofitted)
Weight	[kg]	0.231
Displays / operating elements		
Display		Display unit 3 x LED green (bar, psi, kPa) Switching status 1 x LED yellow 4-digit alphanumeric display / alternating indication Measured values of red and green
Electrical connection		
Connection		M12 connector; Gold-plated contacts

Wiring

Core colours

BK black
BN brown
BU blue
WH white



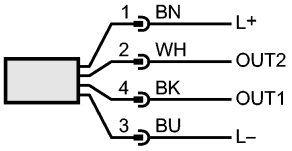

OUT1: switching output or IO-Link
OUT2: 4...20 mA / 0...10 V
Colours to DIN EN 60947-5-2

Remarks

Remarks

*) BFSL = Best Fit Straight Line / LS = Limit Value Setting
**) with temperature fluctuations < 10 K
***) in% of the span / 6 months
¹) to EN50178, SELV, PELV
²) Depends on lubrication, seal and pressure rating

Pack quantity	[piece]	1