FLOAT AND THERMOSTATIC STEAM TRAPS
FLT17LC
(1/2”- 3/4”; DN15 - 20)



DESCRIPTION

FLT17LC float and thermostatic (integral air vent) steam traps series are designed for all types of low and high pressure steam heating and process equipment.
Typical applications include unit heaters, heat exchangers, driers, jacketed vessels and all the applications where continuous drainage is essential.
Connections are female screwed or flanged for horizontal or vertical installation.

MAIN FEATURES

Modulating discharge.
Discharges condensate at steam temperature.
Unaffected by sudden or wide load and pressure changes.
Excellent air discharge (by thermostatic air vent).

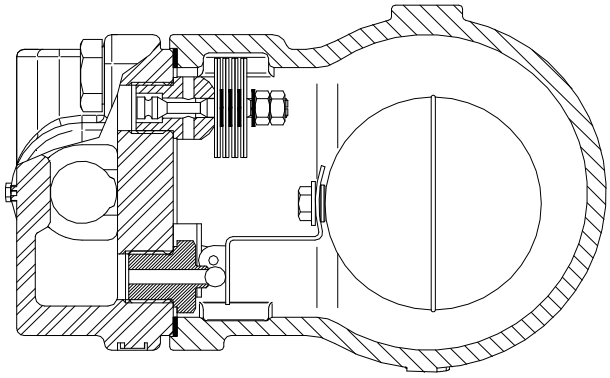

OPTIONS:	SLR – steam lock release Equalizing plug or vent connection
USE:	Saturated and superheated steam.
AVAILABLE MODELS:	FLT17LC-4,5 , 10 and 14
SIZES:	DN ½” to DN3/4” – DN15 to DN20
CONNECTIONS:	Female screwed ISO7/1 Rp (BS21) Flanged EN 1092-2 PN16 or ANSI
INSTALLATION:	Standard horizontal installation – From right to left FLT17LC (R-L)

Upon request:
-horizontal installation with the flow from left to right (L-R)
-vertical installation with the flow from top to bottom (V)

MAX. DIFFERENTIAL PRESSURE

FLT17LC-4,5 : 4,5 bar
FLT17LC-10 : 10 bar
FLT17LC-14: 14 bar

BODY LIMITING CONDITIONS		
FLANGED PN16*	FLANGED ANSI 150 **	RELATED TEMP.
ALLOW. PRES.	ALLOW. PRES.	
16 bar	15,4 bar	100 ºC
15,5 bar	14,6 bar	150 ºC
14,7 bar	13,8 bar	200 ºC
13,9 bar	12,1 bar	250 ºC

PMO - Max. operating pressure 14 bar
TMO - Max. operating temperature 198 ºC
* According to EN1092-2:2000 ; ** Acc. to EN1759-1:2004
Body limiting conditions PN16 or below, depending on the type of connection adopted. Rating PN16 for thread.

FLOW RATE CAPACITY IN Kgs/h														
MODEL	SIZE	DIFFERENTIAL PRESSURE (bar)												
		0,5	1	1,5	2	3	4,5	6	7	8	9	10	12	14
FLT17LC-4,5	15 - 20	200	280	320	360	400	495							
FLT17LC-10	15 - 20	110	140	175	190	230	280	300	330	350	390	405		
FLT17LC-14	15 - 20	70	100	120	140	155	190	210	220	225	230	260	280	300

We reserve the right to change the design and material of this product without notice.

Produced in accordance with Article 3, paragraph 3 of the PED - European Pressure Equipment Directive - 97/23/EC. IS 1.334 E 05.07

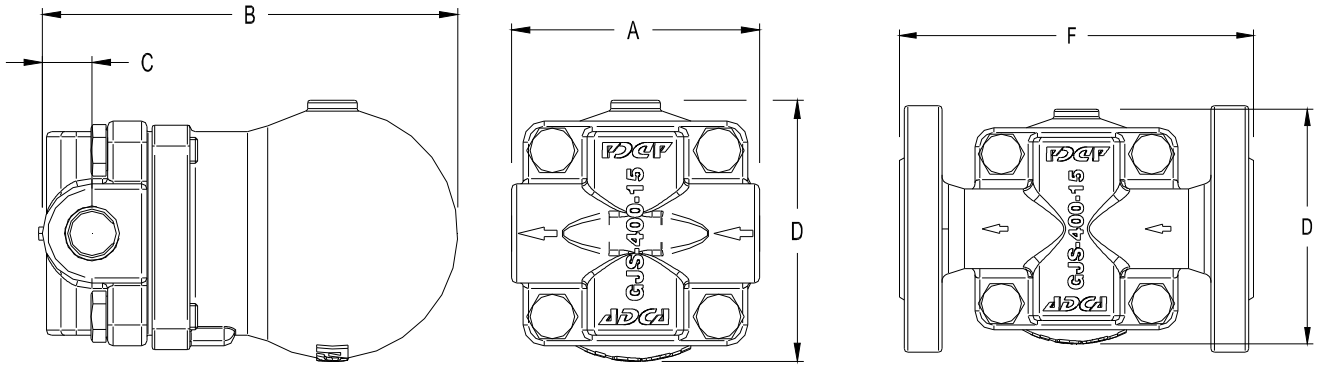

DIMENSIONS (mm)									
Screwed						EN PN16		ANSI 150	
SIZE DN	A	B	C	D	WGT. Kgs	F	WGT. Kgs	F	WGT. Kgs
15-1/2"	95	160	23	100	3,5	150	5	150	4,5
20-3/4"	95	160	23	100	3,5	150	5,5	150	4,7

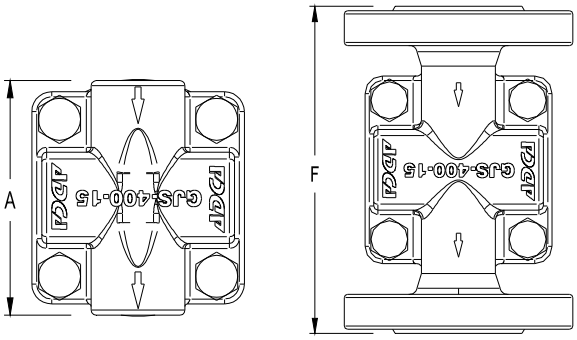

Vertical Installation (V)

MATERIALS		
POS.Nr.	DESIGNATION	MATERIAL
1	Body	GJS-400-15 / 0.7040
2	Cover	GJS-400-15 / 0.7040
3	*Gasket	Stainless st. / Graphite
4	*Seat	AISI 410 / 1.4006
5	*Valve	AISI 410 / 1.4006
6	*Lever	AISI 304 / 1.4301
7	*Float	AISI 304 / 1.4301
8	*Air vent	Stainless st. (Bimetallic)
9	Bolts	Steel 8.8

*Available spare parts.

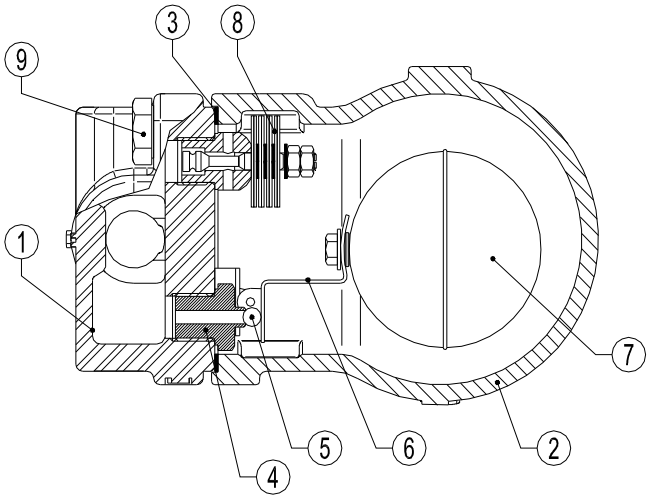

We reserve the right to change the design and material of this product without notice.