JUMO GmbH & Co. KG
Delivery address: Mackenrodtstraße 14
36039 Fulda, Germany
Postal address: 36035 Fulda, Germany
Phone: +49 661 6003-0
Fax: +49 661 6003-607
Email: mail@jumo.net
Internet: www.jumo.net

JUMO UK LTD
JUMO House
Temple Bank, Riverway
Harlow, Essex, CM20 2DY, UK
Phone: +44 1279 63 55 33
Fax: +44 1279 62 50 29
Email: sales@jumo.co.uk
Internet: www.jumo.co.uk

JUMO Process Control, Inc.
6724 Joy Road
East Syracuse, NY 13057, USA
Phone: +1 315 437 5866
Fax: +1 315 437 5860
Email: info.us@jumo.net
Internet: www.jumousa.com

JUMO heatTHERM

Panel-mounted thermostat

for controlling and monitoring thermal processes

Areas of application

- Mechanical and plant engineering
- Heating, ventilation, and air-conditioning
- Catering equipment

Special features

- Electromechanical measuring principle
- Temperature compensation
- Control ranges up to 500 °C
- Safety switch-off

Description

The panel-mounted thermostat controls and monitors thermal processes.

The device is suitable for use as a temperature controller TR, temperature monitor TW, safety temperature monitor STW, or safety temperature limiter STB.

The device is used in heating or cooling sources.

Switching functions

Temperature controller TR and Temperature monitor TW
If the temperature on the temperature probe exceeds the setpoint value, the electrical circuit is opened or closed by a microswitch. If the temperature falls below the selected setpoint value (by the switching differential), the microswitch is reset to its initial position.

Restart lock at safety temperature limiter STB
If the temperature at the temperature sensor exceeds the set limit value, the electrical circuit is opened and the microswitch is mechanically locked. After falling below the limit value by approx. 10 % of the temperature range (approx. 15 % of the limit value setting > +350 °C), the switch can be unlocked manually.

Use of the safety temperature monitor STW as a safety temperature limiter STB
The circuitry used with the thermostat must comply with DIN EN 14597 and VDE 0631.

Self-monitoring for the safety temperature limiter STB and safety temperature monitor STW (STB)
If the measuring system is destroyed (i.e. if the expansion fluid leaks), the pressure in the membrane of the STB and STW (STB) drops and permanently opens the electrical circuit. Unlocking is no longer possible.
When the STW (STB) and STB probe cools down into the negative temperature range, the electrical circuit opens. The STB must be unlocked manually using the restart knob when the temperature rises. The STW (STB) automatically restarts.

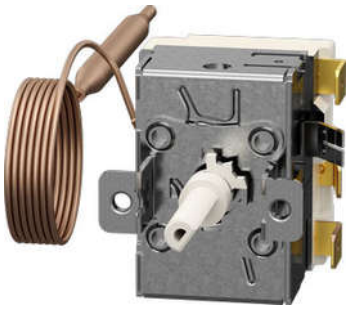

Type 602030/01

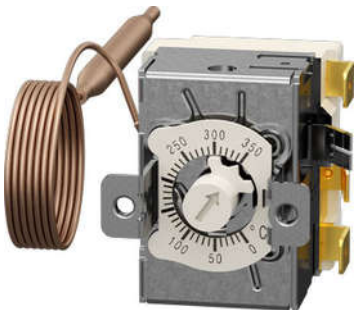

Type 602030/02

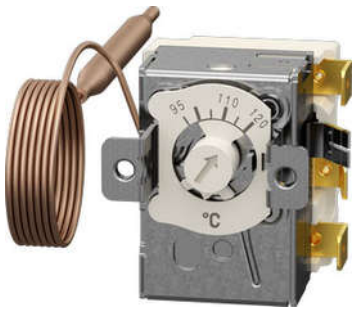

Type 602031/20, type 602031/21



Type 602031/80, type 602031/81

JUMO GmbH & Co. KG
Delivery address: Mackenrodtstraße 14
36039 Fulda, Germany
Postal address: 36035 Fulda, Germany
Phone: +49 661 6003-0
Fax: +49 661 6003-607
Email: mail@jumo.net
Internet: www.jumo.net

JUMO UK LTD
JUMO House
Temple Bank, Riverway
Harlow, Essex, CM20 2DY, UK
Phone: +44 1279 63 55 33
Fax: +44 1279 62 50 29
Email: sales@jumo.co.uk
Internet: www.jumo.co.uk

JUMO Process Control, Inc.
6724 Joy Road
East Syracuse, NY 13057, USA
Phone: +1 315 437 5866
Fax: +1 315 437 5860
Email: info.us@jumo.net
Internet: www.jumousa.com

Approvals

DIN Certco	Designation	DIN
	Testing agency	DIN CERTCO/TÜV Süd
	Certificate no.	STB1169
	Inspection basis	DIN EN 14597
	Valid for	Type 602031, switching function STB
	Designation	DIN
	Testing agency	DIN CERTCO/TÜV Süd
	Certificate no.	STW(STB)1190
	Inspection basis	DIN EN 14597
	Valid for	Type 602031, switching function STW (STB)
	Designation	DIN
	Testing agency	DIN CERTCO/TÜV Süd
	Certificate no.	TR1168
	Inspection basis	DIN EN 14597
	Valid for	Type 602030, switching function TR
	Designation	DIN
	Testing agency	DIN CERTCO/TÜV Süd
	Certificate no.	TW1189
	Inspection basis	DIN EN 14597
	Valid for	Type 602030, switching function TW
	Designation	DIN
	Testing agency	DIN CERTCO
	Certificate no.	B_{10d} = 250.000[a]
	Inspection basis	DIN EN ISO 13849-1
	Valid for	Type 602030, Type 602031
c UL us	Designation	UL
	Testing agency	UL Germany
	Certificate no.	E66358 Vol. 1
	Inspection basis	UL 873
	Valid for	Type 602030, Type 602031, with switching capacity 230 V, 16 A
	Designation	UL
	Testing agency	UL Germany
	Certificate no.	MH45736 Vol. 1
	Inspection basis	UL 353
	Valid for	Type 602031 (STB), with switching capacity 230 V, 16 A
PED	Designation	PED
	Testing agency	TÜV Süd
	Certificate no.	Z-IS-TAF-MUC-18-05-2652099-02162623
	Inspection basis	2014/68/EU
	Valid for	Type 602031
EAC	Designation	EAC[b]
	Testing agency	GOST Norm AG
	Certificate no.	TC TU C-DE.AB98.B.00348
	Inspection basis	Technical rules of the customs union Russia/Belarus/Kazakhstan
	Valid for	Type 602030, Type 602031

[a] For further details see safety manual B 602031.9. Switching capacity check implemented at 230 V, 16 A, ohmic load.

[b] Russian documentation available upon request.

Certificates for approved device versions are available for download on the manufacturer's website.

JUMO GmbH & Co. KG
Delivery address: Mackenrodtstraße 14
36039 Fulda, Germany
Postal address: 36035 Fulda, Germany
Phone: +49 661 6003-0
Fax: +49 661 6003-607
Email: mail@jumo.net
Internet: www.jumo.net

JUMO UK LTD
JUMO House
Temple Bank, Riverway
Harlow, Essex, CM20 2DY, UK
Phone: +44 1279 63 55 33
Fax: +44 1279 62 50 29
Email: sales@jumo.co.uk
Internet: www.jumo.co.uk

JUMO Process Control, Inc.
6724 Joy Road
East Syracuse, NY 13057, USA
Phone: +1 315 437 5866
Fax: +1 315 437 5860
Email: info.us@jumo.net
Internet: www.jumousa.com

Technical data

Electrical data

Switching element	Snap-action switch with single-pole changeover contact		
Max. switching capacity[a]			
On the NC contact (contact deck 1 to 2)			
TW/TR, STW (STB), STB	AC 400 V +10 %, 16 A, AC 230 V +10 %, 16 (2.5)[b] A, cos φ = 1 (0.6)[b], DC 230 V +10 %, 0.25 A		
On the NO contact (contact deck 1 to 4)			
TW/TR, STW (STB)	AC 400 V +10 %, 6.3 A, AC 230 V +10 %, 6.3 (2.5)[b] A, cos φ = 1 (0.6)[b], DC 230 V +10 %, 0.25 A		
On the signal contact (contact deck 1 to 4)			
STB	AC 400 V +10 %, 2 A, AC 230 V +10 %, 2 (0.4)[b] A, cos φ = 1 (0.6)[b], DC 230 V +10 %, 0.25 A		
Switching differential in % of the control range and limit value range	Nominal value		
TW/TR	2.5		
	7		
STW (STB)	7		
Switching point accuracy in % of the limit value range			
TW/TR	In the upper third of the scale ± 3 %, at scale beginning ± 6 %, valid for the nominal value 2.5		
	In the upper third of the scale ± 4 %, at scale beginning ± 8 %, valid for the nominal value 7		
STW (STB), STB	Control range	In the "first half"	In the "second half"
	70 to 130 °C	0/-12 K	0/-5 K
	95 to 120 °C	0/-5 K	0/-5 K
	20 to 150 °C	0/-15 K	0/-10 K
	50 to 300 °C	0/-30 K	0/-15 K
Electrical connection	DIN 46244		
Connection elements	Contact plate/tab connector form A		
	A 6.3/0.8		
Switching reliability	Minimum load for maximum switching reliability:		
For silver contacts	AC/DC = 24 V, 100 mA		
With gold-plating	AC/DC = 10 V, 5 mA		

[a] On request max. 25 A at 230 V AC

[b] Inductive loads

Environmental influences

Ambient temperature influence	Related to the control range and limit value range: When the ambient temperature on the switching head deviates from the calibration ambient temperature of +22 °C, a switching point offset occurs.
Admissible storage temperature	-50 to +50 °C or up to max. admissible ambient temperature, see nameplate
Admissible ambient temperature	80 °C, see nameplate
Rated position (NL)	Any

JUMO GmbH & Co. KG
Delivery address: Mackenrodtstraße 14
36039 Fulda, Germany
Postal address: 36035 Fulda, Germany
Phone: +49 661 6003-0
Fax: +49 661 6003-607
Email: mail@jumo.net
Internet: www.jumo.net

JUMO UK LTD
JUMO House
Temple Bank, Riverway
Harlow, Essex, CM20 2DY, UK
Phone: +44 1279 63 55 33
Fax: +44 1279 62 50 29
Email: sales@jumo.co.uk
Internet: www.jumo.co.uk

JUMO Process Control, Inc.
6724 Joy Road
East Syracuse, NY 13057, USA
Phone: +1 315 437 5866
Fax: +1 315 437 5860
Email: info.us@jumo.net
Internet: www.jumousa.com

Max. admissible probe temperatures

Control ranges	
0 to 120 °C	145 °C
0 to 200 °C	230 °C
20 to 90 °C	115 °C
20 to 150 °C	180 °C, only with setting range with 250 angular degrees (only STW/STB)
50 to 300 °C	345 °C, probe material CrNi
50 to 300 °C	345 °C, probe material CrNi, only with setting range with 250 angular degrees (only STW/STB)
95 to 120 °C	145 °C
70 to 130 °C	155 °C
Up to 500 °C[a]	Upon request

[a] Up to 350 °C with approval, from 350 to 500 °C without approval

Switching point tolerance

Switching point tolerance of limit value range	
STW (STB)	
95 °C	0/-5 K With max. admissible probe temperature 145 °C
100 °C	0/-5 K With max. admissible probe temperature 145 °C
110 °C	0/-5 K With max. admissible probe temperature 145 °C

Mechanical features

Material	
Housing	Steel sheet, zinc-plated
Capillary	CrNi Cu-DHP (standard), up to max. 300 °C
Probe	CrNi Cu, up to max. 200 °C
Switching socket	Polyester resin molding compound, white
Capillary	
Length	1000 mm 2000 mm (standard) including 460 mm protective tubing 3000 mm Different lengths upon request
Diameter	1.25 mm
Min. bending radius	5 mm
Protection type	DIN EN 60529 IP00
Weight	Approx. 120 g

JUMO GmbH & Co. KG
Delivery address: Mackenrodtstraße 14
36039 Fulda, Germany
Postal address: 36035 Fulda, Germany
Phone: +49 661 6003-0
Fax: +49 661 6003-607
Email: mail@jumo.net
Internet: www.jumo.net

JUMO UK LTD
JUMO House
Temple Bank, Riverway
Harlow, Essex, CM20 2DY, UK
Phone: +44 1279 63 55 33
Fax: +44 1279 62 50 29
Email: sales@jumo.co.uk
Internet: www.jumo.co.uk

JUMO Process Control, Inc.
6724 Joy Road
East Syracuse, NY 13057, USA
Phone: +1 315 437 5866
Fax: +1 315 437 5860
Email: info.us@jumo.net
Internet: www.jumousa.com

Dimensions

Type 602030/01, temperature controller TR

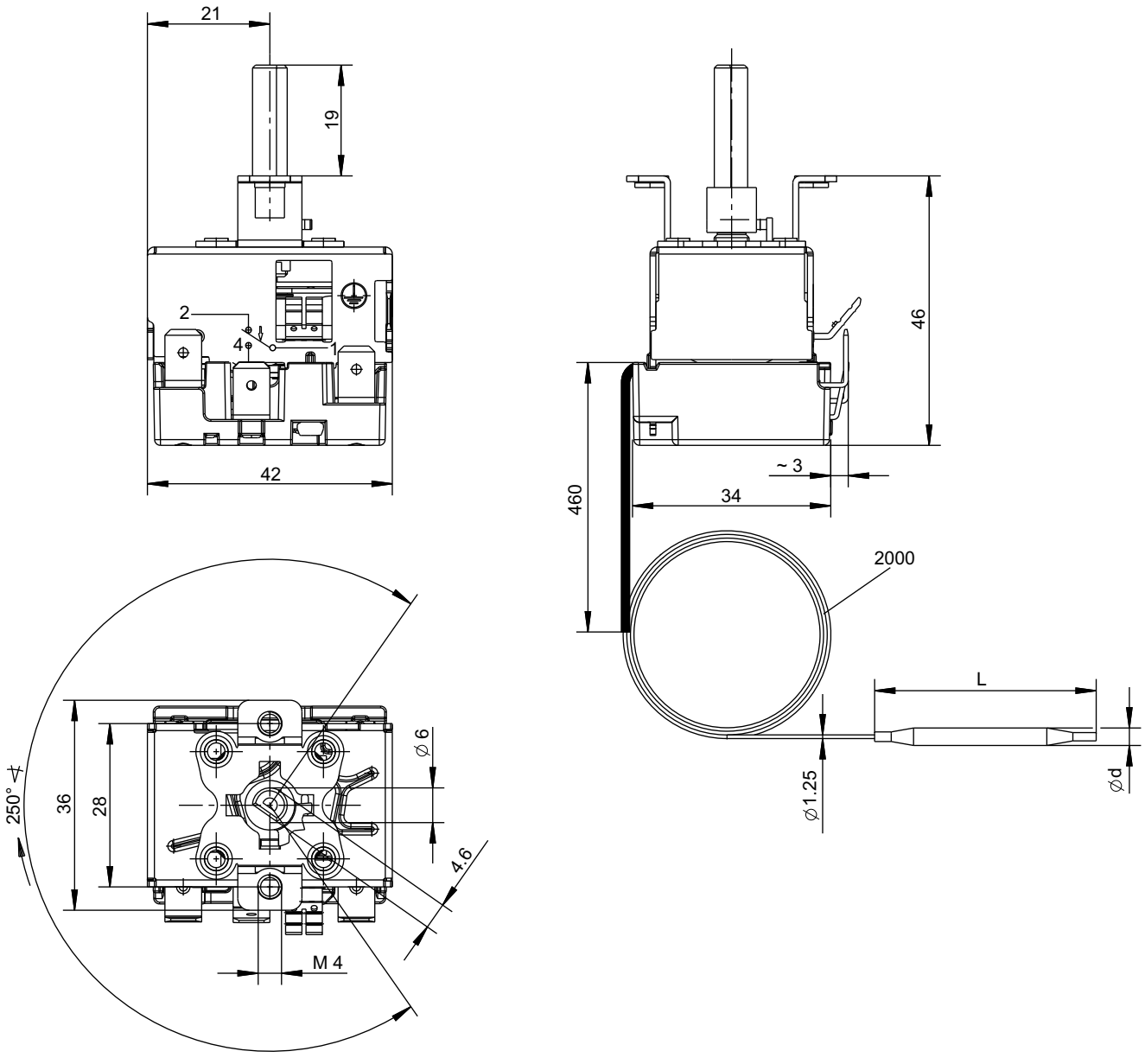

All specifications in mm.

JUMO GmbH & Co. KG
Delivery address: Mackenrodtstraße 14
36039 Fulda, Germany
Postal address: 36035 Fulda, Germany
Phone: +49 661 6003-0
Fax: +49 661 6003-607
Email: mail@jumo.net
Internet: www.jumo.net

JUMO UK LTD
JUMO House
Temple Bank, Riverway
Harlow, Essex, CM20 2DY, UK
Phone: +44 1279 63 55 33
Fax: +44 1279 62 50 29
Email: sales@jumo.co.uk
Internet: www.jumo.co.uk

JUMO Process Control, Inc.
6724 Joy Road
East Syracuse, NY 13057, USA
Phone: +1 315 437 5866
Fax: +1 315 437 5860
Email: info.us@jumo.net
Internet: www.jumousa.com

Type 602030/02, temperature monitor TW

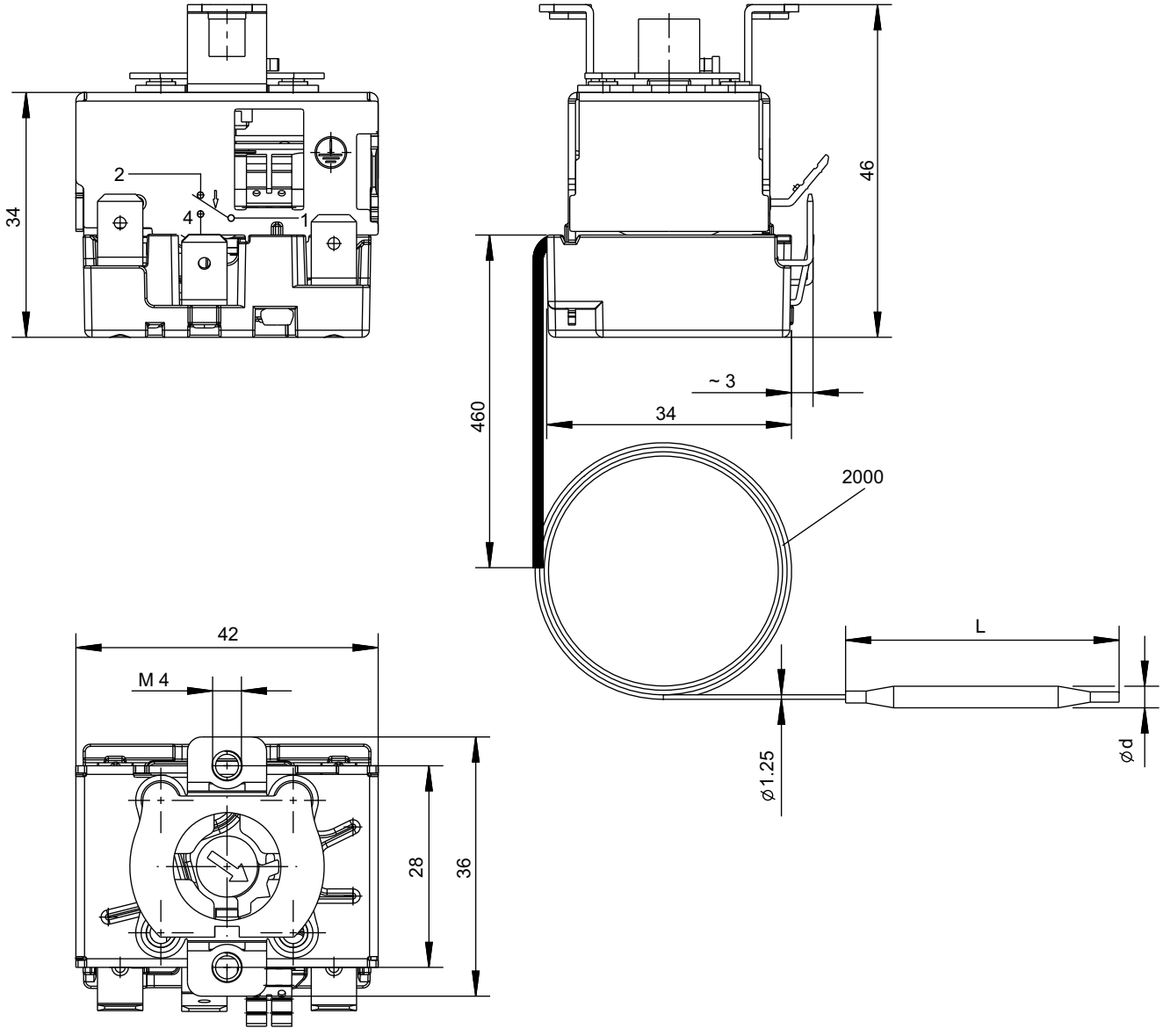

All specifications in mm.

JUMO GmbH & Co. KG
Delivery address: Mackenrodtstraße 14
36039 Fulda, Germany
Postal address: 36035 Fulda, Germany
Phone: +49 661 6003-0
Fax: +49 661 6003-607
Email: mail@jumo.net
Internet: www.jumo.net

JUMO UK LTD
JUMO House
Temple Bank, Riverway
Harlow, Essex, CM20 2DY, UK
Phone: +44 1279 63 55 33
Fax: +44 1279 62 50 29
Email: sales@jumo.co.uk
Internet: www.jumo.co.uk

JUMO Process Control, Inc.
6724 Joy Road
East Syracuse, NY 13057, USA
Phone: +1 315 437 5866
Fax: +1 315 437 5860
Email: info.us@jumo.net
Internet: www.jumousa.com

Type 602031/20, safety temperature monitor STW with permanently set switching point

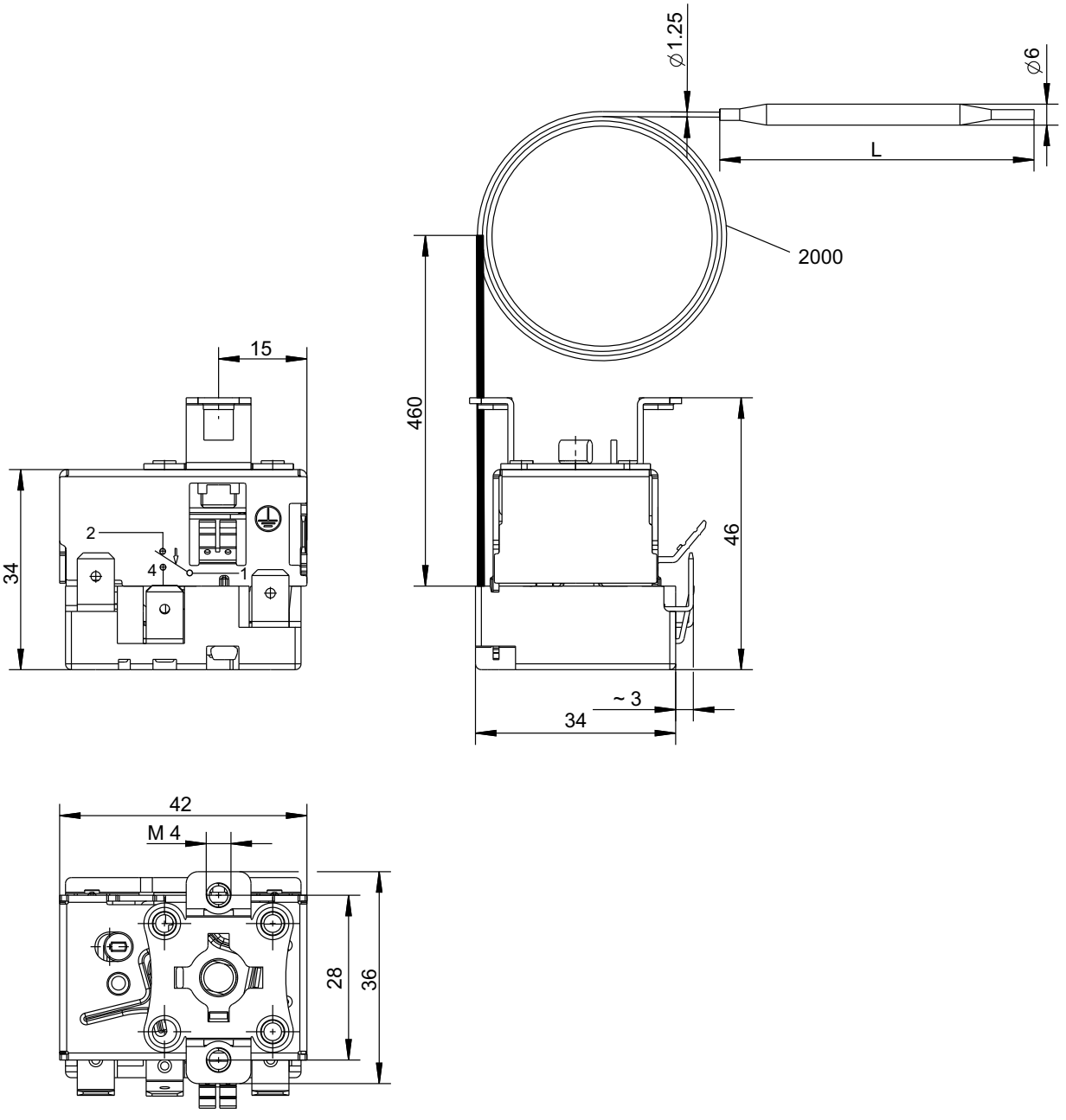

All specifications in mm.

JUMO GmbH & Co. KG
Delivery address: Mackenrodtstraße 14
36039 Fulda, Germany
Postal address: 36035 Fulda, Germany
Phone: +49 661 6003-0
Fax: +49 661 6003-607
Email: mail@jumo.net
Internet: www.jumo.net

JUMO UK LTD
JUMO House
Temple Bank, Riverway
Harlow, Essex, CM20 2DY, UK
Phone: +44 1279 63 55 33
Fax: +44 1279 62 50 29
Email: sales@jumo.co.uk
Internet: www.jumo.co.uk

JUMO Process Control, Inc.
6724 Joy Road
East Syracuse, NY 13057, USA
Phone: +1 315 437 5866
Fax: +1 315 437 5860
Email: info.us@jumo.net
Internet: www.jumousa.com

Type 602031/21, safety temperature monitor STW with adjustable switching point

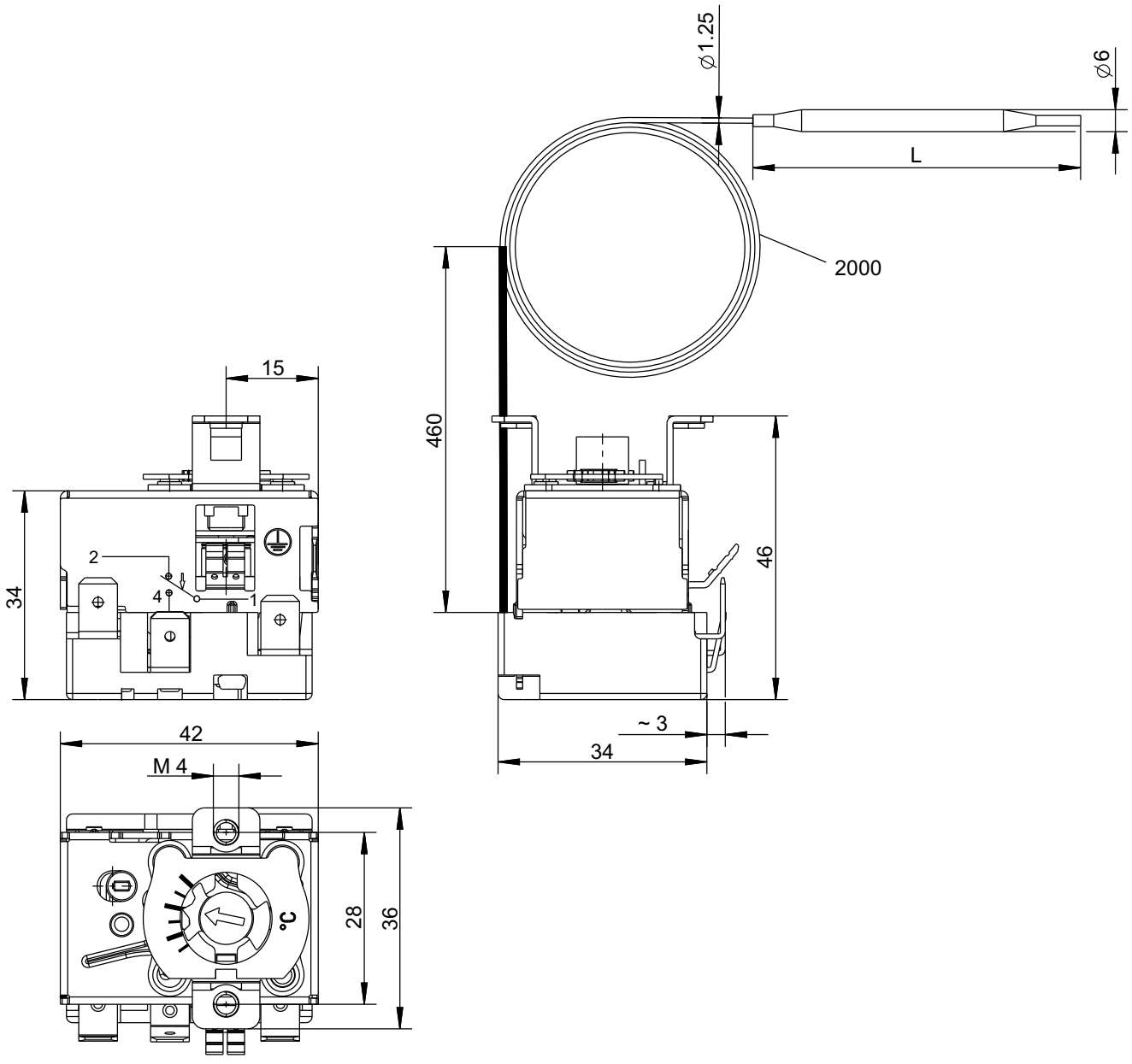

All specifications in mm.

JUMO GmbH & Co. KG
Delivery address: Mackenrodtstraße 14
36039 Fulda, Germany
Postal address: 36035 Fulda, Germany
Phone: +49 661 6003-0
Fax: +49 661 6003-607
Email: mail@jumo.net
Internet: www.jumo.net

JUMO UK LTD
JUMO House
Temple Bank, Riverway
Harlow, Essex, CM20 2DY, UK
Phone: +44 1279 63 55 33
Fax: +44 1279 62 50 29
Email: sales@jumo.co.uk
Internet: www.jumo.co.uk

JUMO Process Control, Inc.
6724 Joy Road
East Syracuse, NY 13057, USA
Phone: +1 315 437 5866
Fax: +1 315 437 5860
Email: info.us@jumo.net
Internet: www.jumousa.com

Type 602031/80, safety temperature limiter STB with permanently set switching point

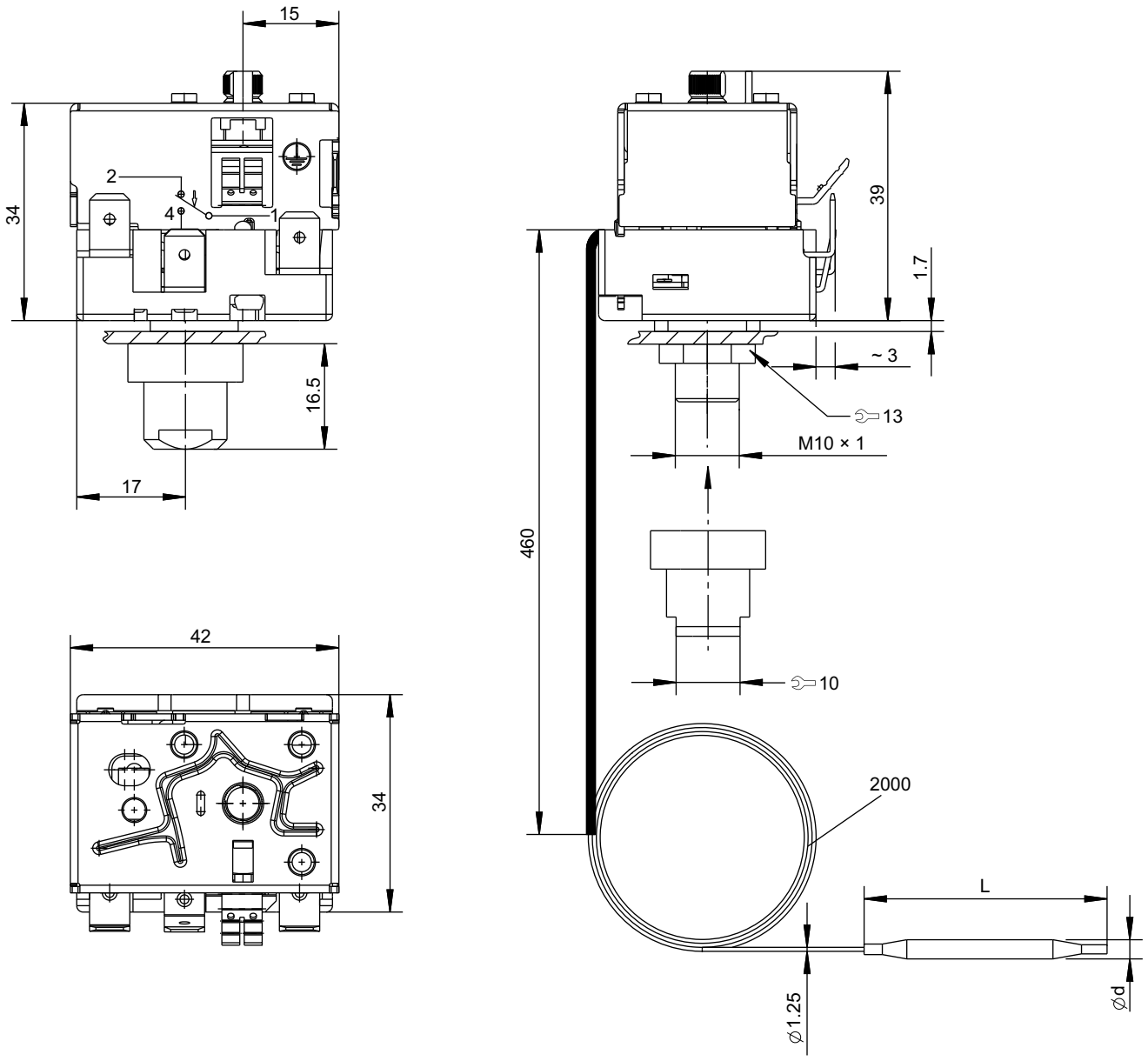

All specifications in mm.

JUMO GmbH & Co. KG
Delivery address: Mackenrodtstraße 14
36039 Fulda, Germany
Postal address: 36035 Fulda, Germany
Phone: +49 661 6003-0
Fax: +49 661 6003-607
Email: mail@jumo.net
Internet: www.jumo.net

JUMO UK LTD
JUMO House
Temple Bank, Riverway
Harlow, Essex, CM20 2DY, UK
Phone: +44 1279 63 55 33
Fax: +44 1279 62 50 29
Email: sales@jumo.co.uk
Internet: www.jumo.co.uk

JUMO Process Control, Inc.
6724 Joy Road
East Syracuse, NY 13057, USA
Phone: +1 315 437 5866
Fax: +1 315 437 5860
Email: info.us@jumo.net
Internet: www.jumousa.com

Type 602031/81, safety temperature limiter STB with adjustable switching point

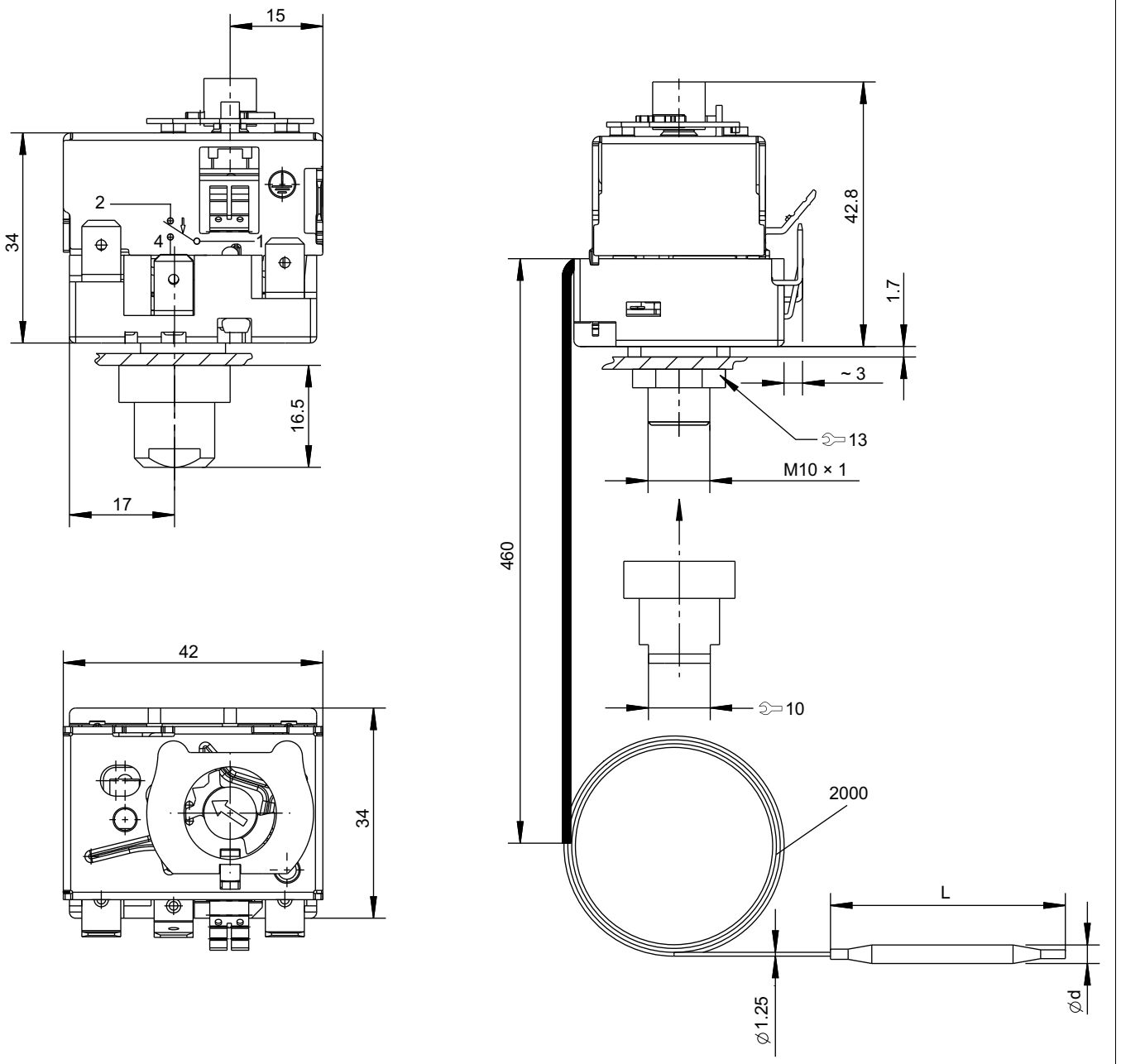

All specifications in mm.

JUMO GmbH & Co. KG
Delivery address: Mackenrodtstraße 14
36039 Fulda, Germany
Postal address: 36035 Fulda, Germany
Phone: +49 661 6003-0
Fax: +49 661 6003-607
Email: mail@jumo.net
Internet: www.jumo.net

JUMO UK LTD
JUMO House
Temple Bank, Riverway
Harlow, Essex, CM20 2DY, UK
Phone: +44 1279 63 55 33
Fax: +44 1279 62 50 29
Email: sales@jumo.co.uk
Internet: www.jumo.co.uk

JUMO Process Control, Inc.
6724 Joy Road
East Syracuse, NY 13057, USA
Phone: +1 315 437 5866
Fax: +1 315 437 5860
Email: info.us@jumo.net
Internet: www.jumousa.com

Type 602031/81, safety temperature limiter STB, setting range with 250 angular degrees

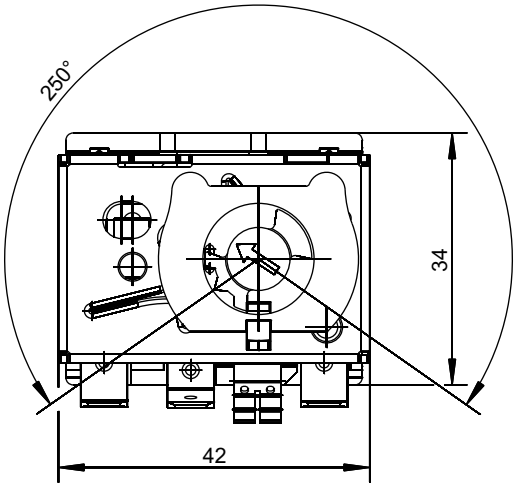

All specifications in mm.

JUMO GmbH & Co. KG
Delivery address: Mackenrodtstraße 14
36039 Fulda, Germany
Postal address: 36035 Fulda, Germany
Phone: +49 661 6003-0
Fax: +49 661 6003-607
Email: mail@jumo.net
Internet: www.jumo.net

JUMO UK LTD
JUMO House
Temple Bank, Riverway
Harlow, Essex, CM20 2DY, UK
Phone: +44 1279 63 55 33
Fax: +44 1279 62 50 29
Email: sales@jumo.co.uk
Internet: www.jumo.co.uk

JUMO Process Control, Inc.
6724 Joy Road
East Syracuse, NY 13057, USA
Phone: +1 315 437 5866
Fax: +1 315 437 5860
Email: info.us@jumo.net
Internet: www.jumousa.com

Connection elements

The connection elements in the data sheet provide information on product selection.

For the electrical connection, only use the installation instructions or the operating manual.

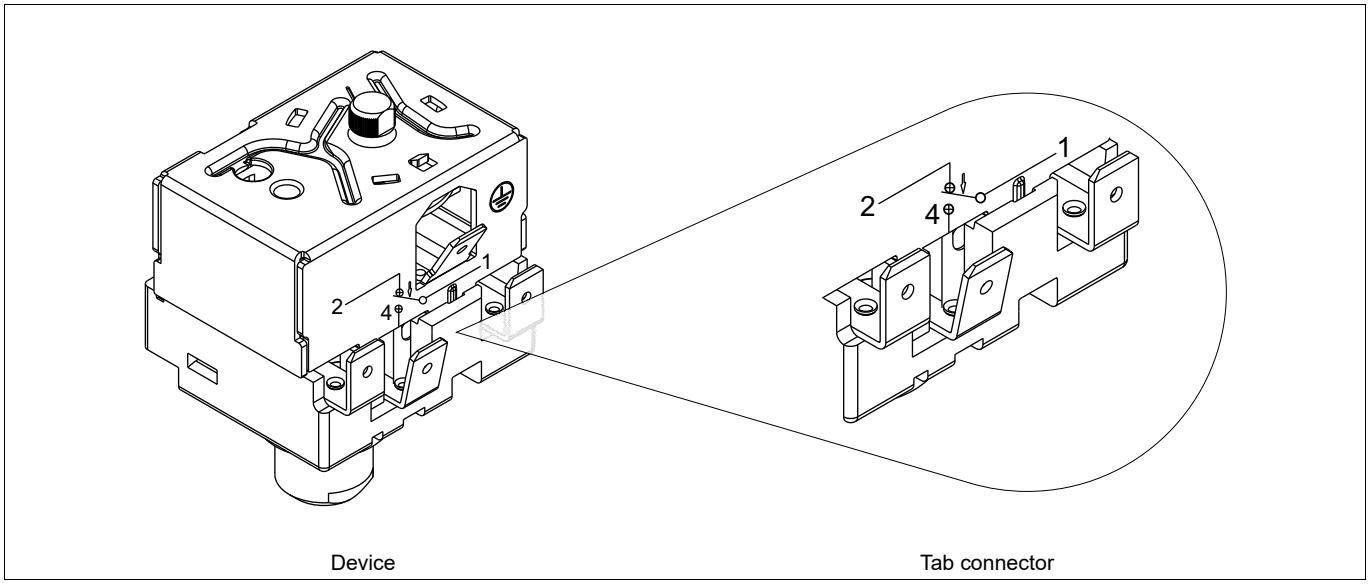

Device Tab connector

Terminal assignment

Tab connector

Designation	Description	Assignment	Circuit diagram
TR, TW, STW	COM	1	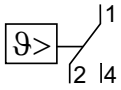
	NC	2	
	NO	4	
STB	COM	1	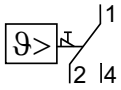
	NC	2	
	NO	4	

JUMO GmbH & Co. KG
Delivery address: Mackenrodtstraße 14
36039 Fulda, Germany
Postal address: 36035 Fulda, Germany
Phone: +49 661 6003-0
Fax: +49 661 6003-607
Email: mail@jumo.net
Internet: www.jumo.net

JUMO UK LTD
JUMO House
Temple Bank, Riverway
Harlow, Essex, CM20 2DY, UK
Phone: +44 1279 63 55 33
Fax: +44 1279 62 50 29
Email: sales@jumo.co.uk
Internet: www.jumo.co.uk

JUMO Process Control, Inc.
6724 Joy Road
East Syracuse, NY 13057, USA
Phone: +1 315 437 5866
Fax: +1 315 437 5860
Email: info.us@jumo.net
Internet: www.jumousa.com

Order details

	(1)	**Basic type**
602030/01		JUMO heatTHERM – panel-mounted thermostats, temperature controller (TR)
602030/02		JUMO heatTHERM – panel-mounted thermostats, temperature monitor (TR)
602031/20		JUMO heatTHERM – panel-mounted thermostats, safety temperature monitor (STW), permanently set
602031/21		JUMO heatTHERM – panel-mounted thermostats, safety temperature monitor (STW)
602031/80		JUMO heatTHERM – panel-mounted thermostats, safety temperature limiter (STB), permanently set
602031/81		JUMO heatTHERM – panel-mounted thermostats, safety temperature limiter (STB)
	(2)	**Control range**
000		With permanently set limit value
026		0 to 120 °C (max. admissible probe temperature 145 °C)
028		0 to 200 °C (max. admissible probe temperature 230 °C)
041		20 to 90 °C (max. admissible probe temperature 115 °C)
043		20 to 150 °C (only with setting range with 250 angular degrees, max. admissible probe temperature 180 °C)
064		50 to 300 °C (probe material CrNi, max. admissible probe temperature 345 °C)
640		50 to 300 °C (probe material CrNi, only with setting range with 250 angular degrees, max. admissible probe temperature 345 °C)
666		95 to 120 °C (max. admissible probe temperature 145 °C)
671		70 to 130 °C (max. admissible probe temperature 155 °C)
...		Up to 500 °C upon request (up to 350 °C with approval, from 350 to 500 °C without approval)
	(3)	**Limit value (STW/STB)**
000		With adjustable control range
095		95 °C (max. admissible probe temperature 145 °C, switching point tolerance 0/-5 K)
100		100 °C (max. admissible probe temperature 145 °C, switching point tolerance 0/-5 K)
110		110 °C (max. admissible probe temperature 145 °C, switching point tolerance 0/-5 K)
	(4)	**Switching differential**
00		None (no specifications for STB)
25		2.5 %
70		7 %
	(5)	**Capillary length**
1000		1000 mm
2000		2000 mm (standard)
3000		3000 mm
....		Upon request
	(6)	**Capillary material**
20		CrNi (stainless steel), Ø 1.25 mm
40		Cu (copper, up to max. 300 °C), Ø 1.25 mm
	(7)	**Process connection**
10		Plain cylindrical probe
	(8)	**Probe diameter**
4		4 mm
6		6 mm
	(9)	**Probe material**
20		CrNi (stainless steel)
40		Cu (copper, up to max. 200 °C)
	(10)	**Type of capillary protective tubing**
00		None
13		PVC tube
	(11)	**Protective tubing length**
0		None
460		460 mm

JUMO GmbH & Co. KG
Delivery address: Mackenrodtstraße 14
36039 Fulda, Germany
Postal address: 36035 Fulda, Germany
Phone: +49 661 6003-0
Fax: +49 661 6003-607
Email: mail@jumo.net
Internet: www.jumo.net

JUMO UK LTD
JUMO House
Temple Bank, Riverway
Harlow, Essex, CM20 2DY, UK
Phone: +44 1279 63 55 33
Fax: +44 1279 62 50 29
Email: sales@jumo.co.uk
Internet: www.jumo.co.uk

JUMO Process Control, Inc.
6724 Joy Road
East Syracuse, NY 13057, USA
Phone: +1 315 437 5866
Fax: +1 315 437 5860
Email: info.us@jumo.net
Internet: www.jumousa.com

	(12)	Extra code
000		None
702		Snap-action switch contact with gold-plating
707		Temperature compensation
742		Tab connector, straight
749		Setting range with 250 angular degrees (only STW/STB)

	(1)		(2)		(3)		(4)		(5)		(6)		(7)	
Order code		-		-		-		-		-		-		-
Order example	602031/80	-	000	-	110	-	00	-	2000	-	40	-	10	-

	(8)		(9)		(10)		(11)		(12)	
		-		-		-		/		, ...[a]
	6	-	40	-	13	-	460	/	707	

[a] List extra codes in sequence, separated by commas.

Further versions are available.
Minimum order quantity: 400 pieces

JUMO GmbH & Co. KG
Delivery address: Mackenrodtstraße 14
36039 Fulda, Germany
Postal address: 36035 Fulda, Germany
Phone: +49 661 6003-0
Fax: +49 661 6003-607
Email: mail@jumo.net
Internet: www.jumo.net

JUMO UK LTD
JUMO House
Temple Bank, Riverway
Harlow, Essex, CM20 2DY, UK
Phone: +44 1279 63 55 33
Fax: +44 1279 62 50 29
Email: sales@jumo.co.uk
Internet: www.jumo.co.uk

JUMO Process Control, Inc.
6724 Joy Road
East Syracuse, NY 13057, USA
Phone: +1 315 437 5866
Fax: +1 315 437 5860
Email: info.us@jumo.net
Internet: www.jumousa.com

Stock versions

JUMO heatTHERM – temperature controller (TR) with 2000 mm capillary and adjustable control range

Order code	Control range	Switching differential	Probe diameter × length	Part no.
602030/01-041-000-25-2000-40-10-6-40-13-460/707	20 to 90 °C	Approx. 2 K	6 × 132 mm	60003218
602030/01-041-000-70-2000-40-10-6-40-13-460/707	20 to 90 °C	Approx. 5 K	6 × 79 mm	60003280
602030/01-026-000-25-2000-40-10-6-40-13-460/707	0 to 120 °C	Approx. 3 K	6 × 87 mm	60003219
602030/01-028-000-25-2000-40-10-6-40-13-460/707	0 to 200 °C	Approx. 5 K	6 × 78 mm	60003220
602030/01-064-000-25-2000-40-10-6-20-13-460/707	50 to 300 °C	Approx. 6 K	6 × 66 mm	60003221

JUMO heatTHERM – temperature monitor (TW) with 2000 mm capillary and adjustable control range

Order code	Control range	Switching differential	Probe diameter × length	Part no.
602030/02-041-000-25-2000-40-10-6-40-13-460/707	20 to 90 °C	Approx. 2 K	6 × 132 mm	60003222
602030/02-041-000-70-2000-40-10-6-40-13-460/707	20 to 90 °C	Approx. 5 K	6 × 79 mm	60003281
602030/02-026-000-25-2000-40-10-6-40-13-460/707	0 to 120 °C	Approx. 3 K	6 × 87 mm	60003223
602030/02-028-000-25-2000-40-10-6-40-13-460/707	0 to 200 °C	Approx. 5 K	6 × 78 mm	60003224
602030/02-064-000-25-2000-40-10-6-20-13-460/707	50 to 300 °C	Approx. 6 K	6 × 66 mm	60003225

JUMO heatTHERM – safety temperature monitor (STW) with 2000 mm capillary and adjustable control range

Order code	Control range	Switching differential	Probe diameter × length	Part no.
602031/21-671-000-70-2000-40-10-6-40-13-460/707	70 to 130 °C	Approx. 10 K	6 × 68 mm	60003226

JUMO heatTHERM – safety temperature limiter (STB), permanently set, with 2000 mm capillary and permanently set to 100 °C

Order code	Control range	Switching differential	Probe diameter × length	Part no.
602031/80-000-100-00-2000-40-10-6-40-13-460/707	Permanently set limit value	Approx. 10 K	6 × 72 mm	60002994

JUMO heatTHERM – safety temperature limiter (STB) with 2000 mm capillary and adjustable control range

Order code	Control range	Switching differential	Probe diameter × length	Part no.
602031/81-666-000-00-2000-40-10-6-40-13-460/707	95 to 120 °C	Approx. 10 K	6 × 72 mm	60002995
602031/81-671-000-00-2000-40-10-6-40-13-460/707	70 to 130 °C		6 × 68 mm	60003136
602031/81-043-000-00-2000-40-10-6-40-13-460/707, 749	20 to 150 °C	In the upper third approx. 15 K	6 × 60 mm	60003291
		At the scale beginning approx. 30 K		
602031/81-640-000-00-2000-40-10-6-20-13-460/707.749	50 to 300 °C	In the upper third approx. 25 K	6 × 85 mm	60003292
		At the scale beginning approx. 45 K		

Minimum order quantity: 1 packaging unit with 5 pieces

JUMO GmbH & Co. KG
Delivery address: Mackenrodtstraße 14
36039 Fulda, Germany
Postal address: 36035 Fulda, Germany
Phone: +49 661 6003-0
Fax: +49 661 6003-607
Email: mail@jumo.net
Internet: www.jumo.net

JUMO UK LTD
JUMO House
Temple Bank, Riverway
Harlow, Essex, CM20 2DY, UK
Phone: +44 1279 63 55 33
Fax: +44 1279 62 50 29
Email: sales@jumo.co.uk
Internet: www.jumo.co.uk

JUMO Process Control, Inc.
6724 Joy Road
East Syracuse, NY 13057, USA
Phone: +1 315 437 5866
Fax: +1 315 437 5860
Email: info.us@jumo.net
Internet: www.jumousa.com

Accessories

According to product groups 606710 and 606715

Thermowell set
(according to product group 606710), suitable for type 602030, 602031, and 603070 up to probe diameter Ø 6 mm

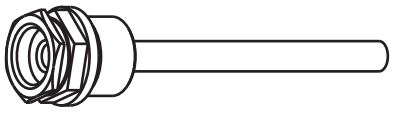		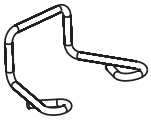	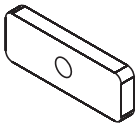		
Thermowell with sealing collar		Clamp for strain relief	Plate for surface-mounted thermostat	Screw for surface-mounted thermostat	
Type	Code	Connection	Sleeve diameter × insertion length EL[a] in mm	Material	**Part no.**
Screw-in thermowell with sealing collar	28	G 1/2"	Ø 8 × 100	Brass, nickel-plated compressive strength at 150 °C: 48 bar	60003177
			Ø 8 × 150		60003203
			Ø 8 × 200		60003171
			Ø 8 × 100	Stainless steel, 1.4571 compressive strength at 150 °C: 88 bar	60003172
			Ø 8 × 150		60003205
			Ø 8 × 200		60003173

[a] Insertion length corresponds to the end of the sleeve to the sealing collar

Mounting set for mounting rail DIN EN 60715 TH 35-7.5
(according to product group 606710)

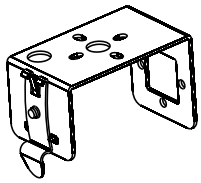			
Type	2 screws		**Part no.**
Adapter set, mounting rail JUMO heatTHERM/EM	M3 × 4	M4 × 5	00511794

Setpoint adjuster
(according to product group 606715), suitable for type 602031/01

					
Type	Control range in °C	Rotary knob 07	Orifice plate 23	Adjustable limit stop 16	2 screws	**Part no.**
W8	20 to 90				M4 × 8	60003091
	0 to 120					60003227
	0 to 200					60003095
	50 to 300					60003098