

EOZ brings you the FL.series range, the first small-sized push button in the world with a Full Lighted cap.

Available in 12 mm and 13.5 mm diameters, it fits perfectly in a lot of application in the market and advantageously replace our competitors' products

Manufactured and designed in France, vandal-resistant by nature and IP67, our range Full Lighting shines by its quality and aesthetic.

Mechanical

Travel	(nom)	2 mm ±0.3mm
Operating force	(nom)	5 N ±30%
Panel thickness	(max)	1 - 6 mm
Terminal type		plug-in terminal 2.8 x 0.5
Contact		Momentary

Electrical

Dielectric strength	2500V a.c.
Insulation resistance	1GΩ
Contact resistance	< 50mΩ

Ligthing

Voltage	5V
Current LED	65 mA max

Environmental

RoHS

Ingress protection	IP67
Operating temperature range	-40°C to +85°C

Materials

Body	PA 6.6
Button	PC
Contacts	Gold plated nickel
Contacts terminals	Gold plated nickel
LED terminals	Silver plated nickel

Part numbers

Non-illuminated

Ø13.5	*Ø12*	*Cap*
FL13NN5	FL12NN5	Black
FL13NB5	FL12NB5	Blue
FL13NG5	FL12NG5	Green
FL13NO5	FL12NO5	Orange
FL13NR5	FL12NR5	Red
FL13NW5	FL12NW5	White
FL13NY5	FL12NY5	Yellow

Illuminated

Ø13.5	*Ø12*	*Cap*
FL13LB5	FL12LB5	Blue
FL13LG5	FL12LG5	Green
FL13LO5	FL12LO5	Orange
FL13LR5	FL12LR5	Red
FL13LW5	FL12LW5	White
FL13LY5	FL12LY5	Yellow

Dual-color illuminated

Ø13.5	*Ø12*	*Cap*	*Illumination color*
FL13DGB5	FL12DGB5	Milky white	Green or Blue
FL13DRB5	FL12DRB5	Milky white	Red or Blue
FL13DRG5	FL12DRG5	Milky white	Red or Green















Ø13.5mm Product Drawings

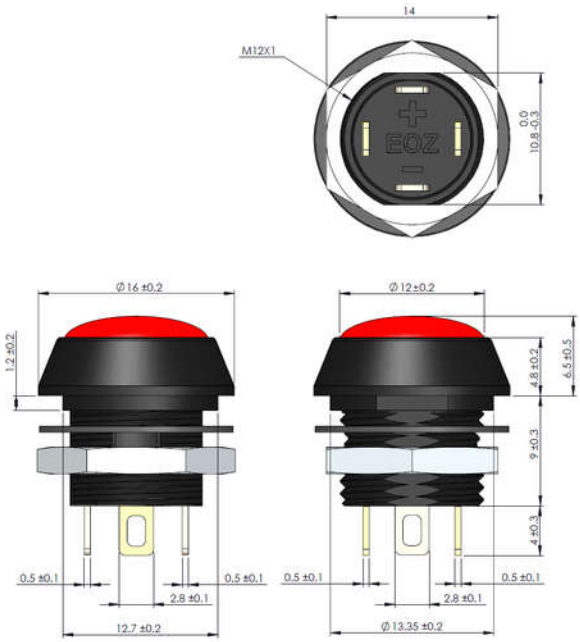

Panel Cut Out

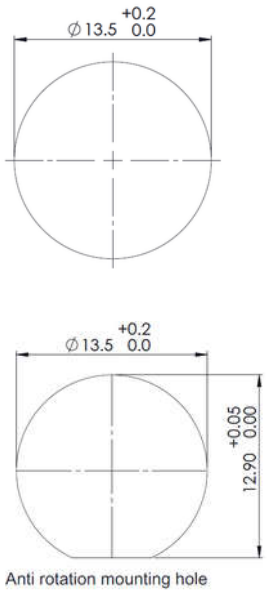

Ø12mm Product Drawings

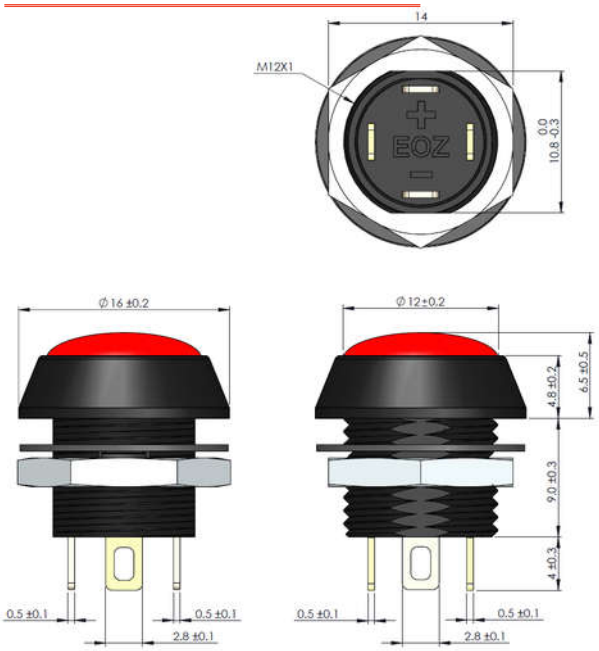

Panel Cut Out

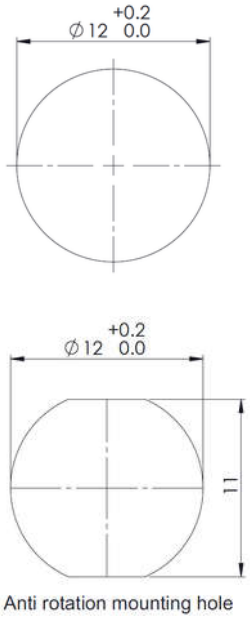

Diagram



www.eozonline.com