DisplayPort Plug

HDMI Plug

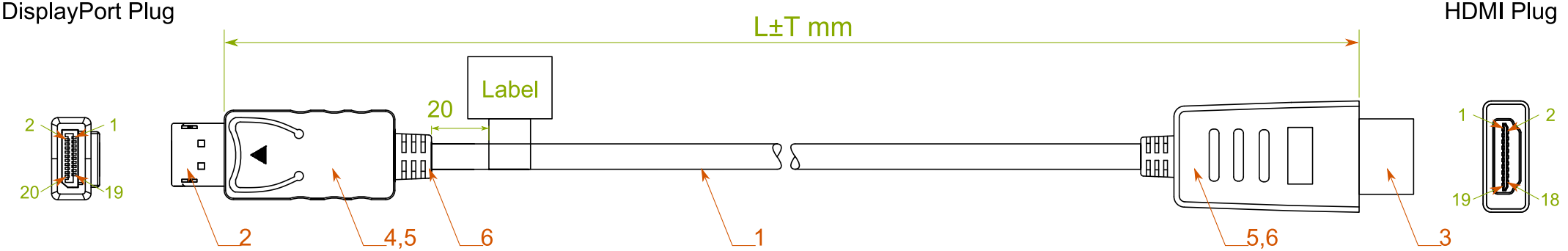

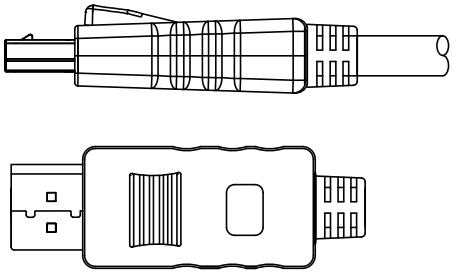

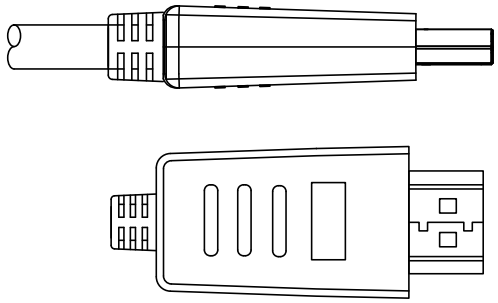

Pin Assignment

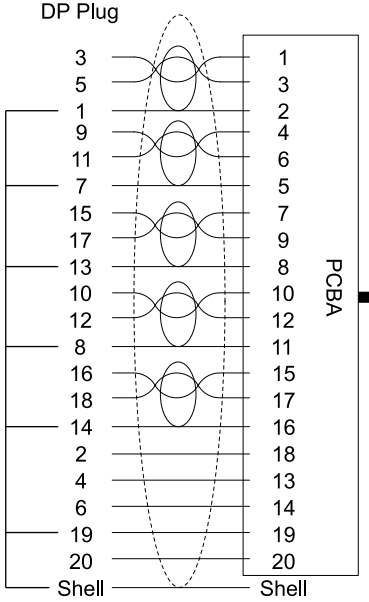

Feature:

Resolution: 1920x1080P @ 60Hz

Specification :

1. Cable — [1P(32AWG)*5 + 1C(28AWG) + 4C(32AWG)] + ADB
   OD: 5.5mm Jacket Color: Black, LSOH
2. Conn. — HDMI Plug with PCB'A, Conductor: Gold Plated, Shell: Nickel Plated
3. Conn. — DisplayPort Plug, Conductor: Gold Plated, Shell: Nickel Plated
4. Hood — For DisplayPort Plug, Black ABS
5. Inner Molding — PE
6. Outer Molging — Black PVC: 45P

Part No.	Length
11.44.5780	1000±50 mm
11.44.5781	2000±50 mm
11.44.5782	3000±50 mm

SECOMP

Issue Date : 2021/10/22

Product Name	ROLINE GREEN DisplayPort Cable, DP - HDTV, M/M
Product No.	11.44.5780 / 11.44.5781 / 11.44.5782

Approve	Check	Draw	Design
Allen	Allen	Kuan	Kuan

Scale 1:1 | Unit : mm

Rev.	Date	Contents of Change	Design
1			
2			
3			