E40235

Screw-in adapter for process sensors

ADAPT SI/G1/4/VA

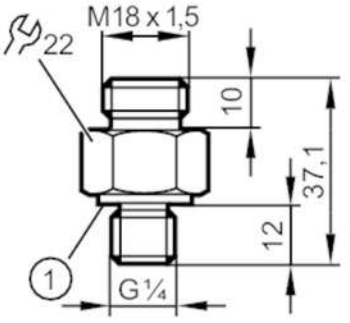

1 O-ring

Application		
Application		for industrial applications
Media		liquids and gases
Pressure rating	[bar]	300
Tests / approvals		
Pressure Equipment Directive EAC		The adapter is intended for use in devices, machines and installations that do not fall under the categories of the technical rule TR CU 032/2013.
Mechanical data		
Weight	[g]	58.5
Materials		stainless steel (1.4404 / 316L)
Sensor connection		M18 x 1,5 internal thread
Process connection		threaded connection G 1/4
Insertion depth	[mm]	13.5; (measuring probe SID, SFD, TN)
Accessories		
Items supplied		O-ring: 1, FKM
Remarks		
Pack quantity		1 pcs.